Erie™ PopTop™ Series

Valve Bodies and Actuators

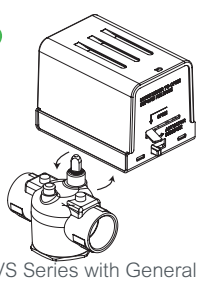

VT/VS Series with General Close-Off Actuator

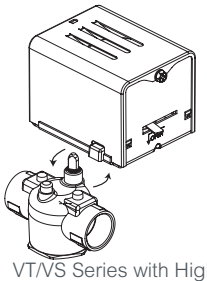

VT/VS Series with High Close-Off Actuator

Product Description

Erie™ PopTop™ Series valve bodies and actuators provide easy installation for a variety of heating and cooling applications. The valve's actuator can be installed after the valve body has been installed onto the fan coil, baseboard or air handler. VS Series valves are available for low pressure steam applications. PopTop Series are two position spring return valves. When powered, the actuator moves to the desired position, tensing the spring return system. When power is removed the actuator returns to the normal position. PopTop Series two position spring return valves can be purchased with an optional built-in auxiliary SPDT end switch for interfacing or signaling; for example, zone pump burner control. Actuators are designed fror cycling applications (not constantly powered).

Specifications

Service	Hot and chilled water models, up to 50% glycol. Steam models up to 15 psi (both valve body and valve actuator must be rated for high temperature)
System Static Pressure Limits	400 psi (2758 kPa)
Fluid/Ambient Temperature Limits	See Table 1
Close-off	See Table 2
Seat Leakage	ANSI class IV (0.01%) with pressure at inlet (B-port/A-port, if 3-way)
Body	Forged brass
Stem	Nickel-plated
Seat	Brass
Paddle (VT series) (VS series)	 Buna N Highly saturated nitrile
Actuator Voltage	24 Vac @ 50/60 Hz, 110 Vac @ 50 Hz, 120 Vac @ 60 Hz, 230 Vac @ 50 Hz, 240 Vac @ 60 Hz, 208 Vac @ 50/60 Hz, 277 Vac @ 50/60 Hz
Power Requirements	6.5 watts, 7.5 Va

Features

- Direct replacement for all existing two-position PopTop applications
- Hysteresis synchronous motor for long life
- Spring return operation provides a fail-safe
- Valve body rated for 400 psi static pressure
- Available in a variety of voltages
- Actuator mounts directly onto valve body without need for linkages or calibration
- Manual override lever (normally closed only)
- Actuator can be replaced without any tools, or removal of valve from system
- VS Series available for low pressure steam

Agency Listings UL873	 Underwriters laboratories (File #E9429 Catagory Temperature Indicating and Regulating Equipment).
CUL	UL Listed for use in Canada by Underwriters Laboratory. Canadian Standards C22.2 No. 24. EMC Directive (89/336/EEC). Low Voltage Directive (72/23/EEC).
European Community	
Australia	This product meets requirements to bear the RSM Mark according to the terms specified by the Communications Authority under the Radio Communications Act of 1992.
Shipping Weight (Actuator/Valve Assembly)	2.25 lbs (1020 g).

Table 1: Valve Body and Actuator Models

Model	Temperature Range
VTxxxx	32×…200°F (fluid) @ 104 °F (Ambient) (0…93°C @ 40°C)
VSxxxx	32×…250°F (fluid) @ 169 °F (Ambient) (0…121°C @ 76°C), and/or 15 PSI (103 kPa) Steam[a]
Axx3xxx	32×…200°F (fluid) @ 104 °F (Ambient) (0…93°C @ 40°C)
Axx4xxx	32×…250°F (fluid) @ 169 °F (Ambient) \(0…121°C @ 76°C), and/or 15 PSI (103 kPa) Steam[a]

[a] For steam applications both valve body and valve actuator must be rated for high temperature. Example: VS2213G14A020 = Assembly. VS2213 = Valve body. AG14A020 = Actuator.

1.888.610.7664 www.calcert.com sales@calcert.com

Accessories for Inverted Flare Connection Valves

3/4" inverted flare bodies accept the following adapters to copper pipe:

436-214-1	Union nut & elbow assembly, female for 1/2" (5/8" O.D.) copper, 15/16" long
436-220	Union nut & coupling assembly, female for 1/2" (5/8" O.D.) copper, 1-1/16" long
436-252	Union nut & coupling assembly, female for 3/4" (7/8" O.D.) copper, 1-27/32" long
436-229-3	Union nut & nipple assembly, male for 1/2" (5/8" O.D.) copper, 3" long
436-214-4	Union nut & elbow assembly, male for 1/2" (5/8" O.D.) copper, 1-15/16" long
436-256	Union nut & coupling assembly, female for 1" (1-1/8" O.D.) copper, 1-3/8" long

Table 2: Flow Coefficients and Maximum Close-Off Pressure Differentials

Valve Size	Connection Type	2-way Cv (kv)	3-way Cv (kv)	(G) Close-Off ΔP PSI (kPa)	(H) PSI Close-Off ΔP (kPa)
1/2"	NPT, SW, Rp, SAE	1.0 (0.9)	1.5 (30)	60 (414)	75 (517)
3/4"	IFL				
1/2"	NPT, SW, Rp, SAE	2.5 (2.2)	3.0 (2.6)	40 (276)	50 (344)
3/4"	NPT, SW, IFL, Rp				
1/2"	NPT, SW, SAE, Rp	3.5 (3.0)	4.0 (3.4)	25 (172)	30 (208)
3/4"	NPT, SW, IFL, Rp				
1"	SW				
3/4"	NPT, SW, Rp	5.0 (4.3)	5.0 (4.3)	20 (137)	25 (172)
1"	SW				
3/4"	NPT, SW, Rp	7.5 (6.5)	7.5 (6.5)	17 (117)	20 (137)
1"	NPT, SW, Rp	8.0 (6.9)	8.0 (6.9)	17 (117)	20 (137)
1-1/4"	SW				

NPT - Threaded (female)
SW - Sweat
IFL - Inverted Flare
SAE - Society of Automotive Engineers Flare (male)
Rp - "Metric" Threaded (female)
G - General close off acutuator
H - High close off actuator

Table 3: Water Valve Sizing*

ΔP	1.0 Cv	1.5 Cv	2.5 Cv	3.0 Cv	3.5 Cv	4.0 Cv	5.0 Cv	7.5 Cv	8.0 Cv
1 PSI	1.0	1.5	2.5	3.0	3.5	4.0	5.0	7.5	8.0
2 PSI	1.4	2.1	3.5	4.2	4.9	5.7	7.1	10.6	11.3
3 PSI	1.7	2.6	4.3	5.2	6.1	6.9	8.7	13.0	13.9
4 PSI	2.0	3.0	5.0	6.0	7.0	8.0	10.0	15.0	16.0
5 PSI	2.2	3.4	5.6	6.7	7.8	8.9	11.2	16.8	17.9

* Water capacity in gallons per minute (GPM)

Dimensions

General Close-Off

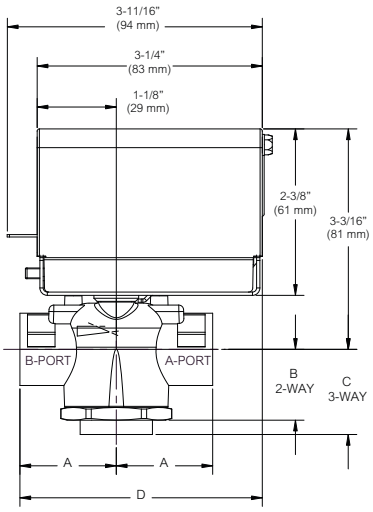

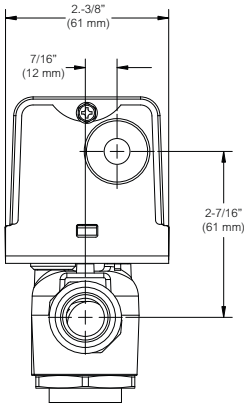

High Close-Off

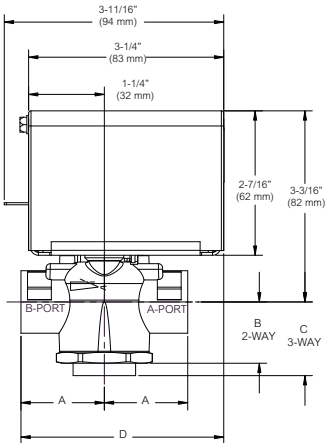

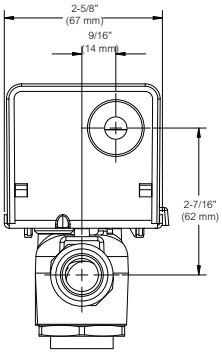

Table 4: Dimensions - inches (mm)

Valve Body Size	A in (mm)	B in (mm)	C in (mm)	D in (mm) (General Close-Off)	D in (mm) (High Close-Off)
1/2" Sweat	1-5/16 (33)	15/16 (23)	1-5/16 (33)	3-5/16 (84)	3-5/8 (92)
3/4" Sweat	1-3/8 (35)	15/16 (23)	1-11/16 (43)	3-3/8 (86)	3-3/4 (95)
1" Sweat	1-11/16 (43)	15/16 (23)	1-11/16 (43)	3-5/8 (92)	4 (102)
1-1/4" Sweat	1-7/8 (47)	1 (25)	1-13/16 (46)	3-11/16 (94)	4-1/8 (105)
1/2" NPT, Rp	1-3/8 (35)	15/16 (23)	1-5/16 (33)	3-3/8 (86)	3-5/8 (92)
3/4" NPT, Rp	1-11/16 (43)	15/16 (23)	1-7/16 (37)	3-5/8 (92)	4 (102)
1" NPT, Rp	1-7/8 (47)	1 (25)	1-11/16 (43)	3-11/16 (94)	4-1/8 (105)
Inverted Flare	See Below			4-3/16 (106)	4-7/16 (113)
SAE Flare	See Below				

Inverted Flare General Close-Off

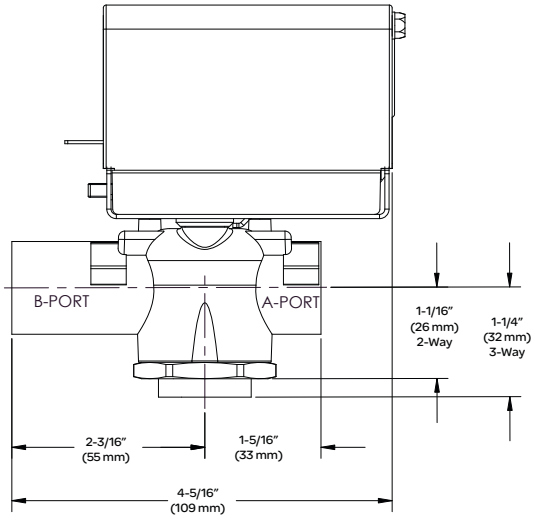

SAE High Close-Off

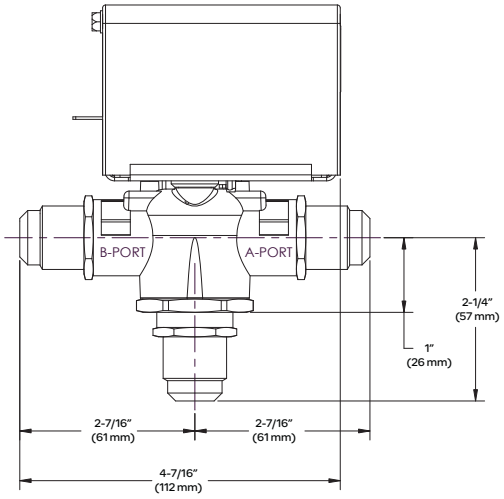

Precautions

This equipment has been tested and found to comply with the limits for a Class B digital device, pursuant to Part 15 of the FCC Rules. These limits are designed to provide reasonable protection against harmful interference in residential installations. This equipment generates, uses, and can radiate radio frequency energy and may cause harmful interference if not installed and used in accordance with the instructions. Even when instructions are followed, there is no guarantee that interference will not occur in a particular installation. If this equipment causes harmful interference to radio and television reception—which can be determined by turning the equipment off and on—the user is encouraged to try to correct the interference by one or more of the following measures:

- Reorient or relocate the receiving antenna.
- Increase the separation between the equipment and receiver.
- Connect the equipment to an outlet on a circuit different from that to which the receiver is connected.
- Consult the dealer or an experienced radio/television technician for help.

Soldering Note: Do not solder with actuator in place, or with paddle against seat, as the heat can damage the unit. Before soldering, move the manual open lever into Open position then remove the actuator from the body. Orient paddle so it is not against a seat. Use lead or tin based solder with melting point below 600 °F. Do not overheat. Direct flame tip away from valve. Cool valve quickly with a wet cloth. Body assembly can be submerged for leak testing prior to attaching the actuator.

⚠ ⚠ DANGER

HAZARD OF ELECTRIC SHOCK

- Follow safe electrical work practices. See NFPA 70E in the USA, or applicable local codes.
- This equipment must only be installed and serviced by qualified electrical personnel.
- Read, understand and follow the instructions before installing this product.
- Turn off all power supplying equipment before working on or inside the equipment.
- Use a properly rated voltage sensing device to confirm power is off.

DO NOT DEPEND ON THIS PRODUCT FOR VOLTAGE INDICATION

Failure to follow these instructions will result in death or serious injury.

A qualified person is one who has skills and knowledge related to the construction and operation of this electrical equipment and the installation, and has received safety training to recognize and avoid the hazards involved. NEC2011 Article 100

No responsibility is assumed by Schneider Electric for any consequences arising out of the use of this material.

NOTICE

RISK OF EQUIPMENT DAMAGE

- Avoid electrical noise interference.
- Do not install near large contactors, electrical machinery, or welding equipment.
- Only use manual override when power is off.
- Do not use manual override with actuators mounted in tandem.

Failure to follow these instructions will result in damage to the gear train or other mechanical damage.

1.888.610.7664 www.calcert.com sales@calcert.com

Installation

Inspect the package for damage. If package is damaged, notify the appropriate carrier immediately. If undamaged, open the package and inspect the device for obvious damage.
Return damaged products.

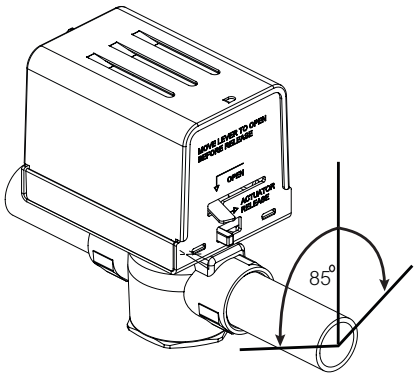

Required Tools

- Tools (not provided)
- Wrench 1 to 1-5/8" (if threaded valve)
- Soldering equipment (if sweat fit) or flare
- Training: Installer must be a qualified, experienced technician
- Other accessories as appropriate

Mounting

Install the valves in either horizontal or vertical piping. When installing in horizontal piping, place the actuator above the valve. The actuator can be tilted up to 85˚ from the vertical. Note: Do not install the actuator underneath an overhead water source that may drip onto the actuator. If necessary, protect the actuator using a drip pan or other protection.

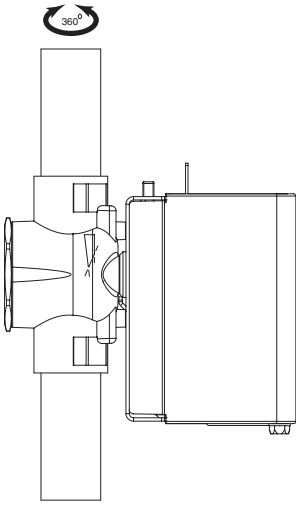

Wiring

Typical Wiring of a PopTop to Replace a Honeywell Valve

Honeywell - Wire Leads

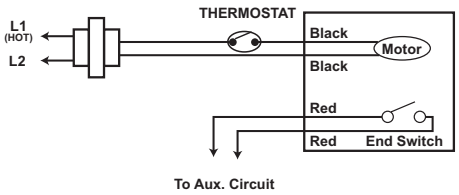

Honeywell - Terminal Block

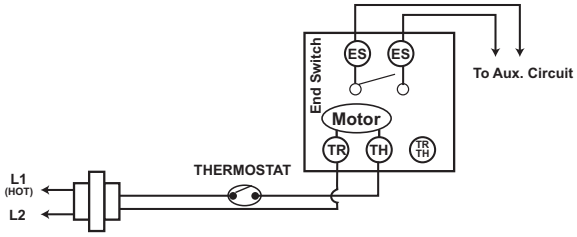

Erie Wire Leads

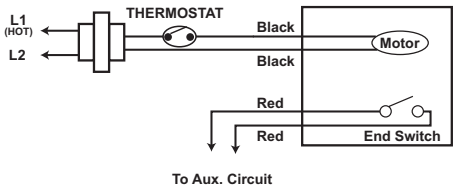

Erie Terminal Block

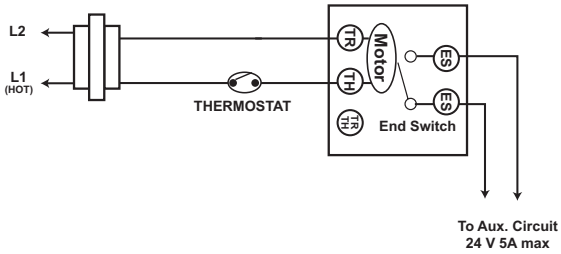

1.888.610.7664 www.calcert.com sales@calcert.com

Typical Wiring of a PopTop to Replace a Flair or White Rodgers 3-Wire Valve

White - Rodgers (1311 or 1321)

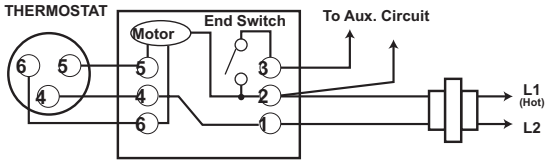

Erie Wire Leads

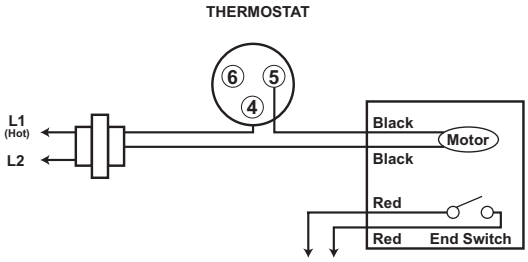

Erie Terminal Block

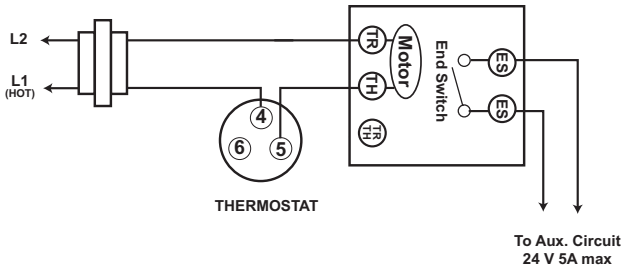

Typical Wiring of a PopTop to Replace a Flair or Taco 3-Wire Valve

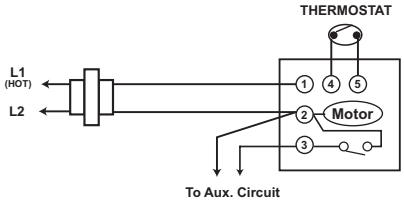

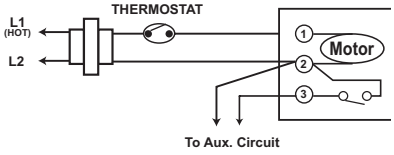

Erie Wire Leads

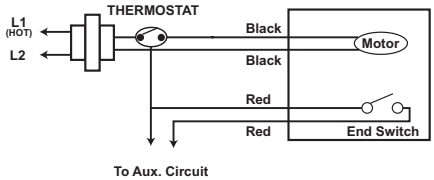

Erie Wire Leads

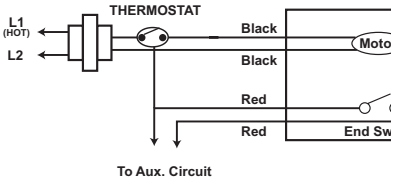

Erie Terminal Block

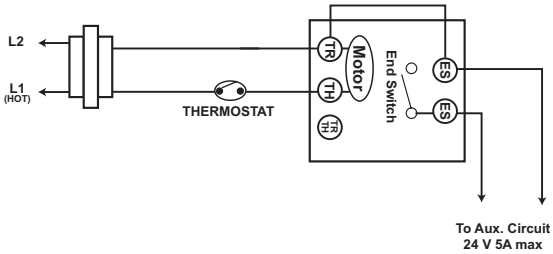

Typical Multiple Valve Wiring

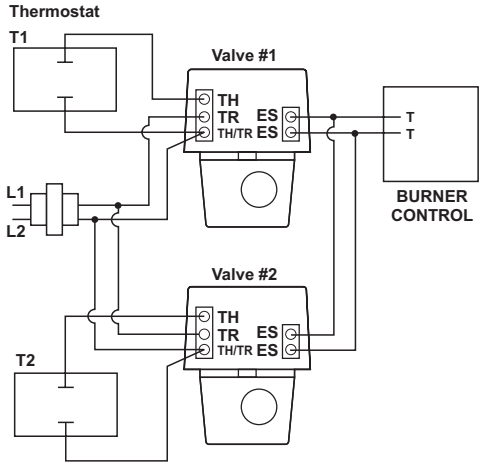

Piping

Pipe the valves so the paddle closes against the direction of flow. Flow is from B to A. Refer to the figures below. When installing the actuator to a normally closed valve, place the actuator in the manually open position using the manual operating lever. The first time the valve is operated electrically, the manual operating lever of the actuator transfers to the automatic position. Use the manual operating lever flush the system after installation. The valves are designed for application in closed hydronic heating and cooling systems. High levels of dissolved oxygen and chlorine found in open systems may attack the valve materials and result in premature failure. Use a drip pan if condensation in chilled water applications occurs.

Use in systems that have substantial make-up water (open systems) is not recommended. Follow proper water treatment practices and system procedures. Refer to document F-26080-1 for Water and Steam EN205 Guidelines.

Notes:

- Three-way valves always require a normally closed actuator.
- Three-way valves are always closed at the B port when no power is applied to the motor.
- On power-up the valve closes to A port on three-way valves.
- Orient the three-way valve body as needed for normally open or normally closed flow through coil.
- For three-way N.O. applications, use a N.C. actuator and pipe the valve in reverse.
- Apply Teflon tape to all but the last two threads of male pipe thread. Hand screw the pipe into the valve, turning it as far as it will go. Use a wrench to fully tighten the valve to the pipe. Do not over tighten or strip the threads.

NOTICE

RISK OF EQUIPMENT DAMAGE

- Protect the valve body from freezing. Freezing can be caused by low ambient air temperatures or by equipment such as water source heat pumps with inadequate freeze protection.

Failure to follow these instructions may result in property damage.

Inverted Flare Union Connection

Solder fittings onto the pipe. Use solder with melting point below 600°F. Mount valve to union nuts.

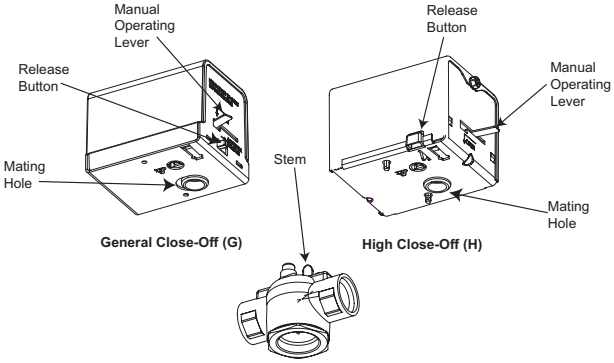

Installing Actuator Onto Valve Body

Slowly latch the manual operating lever in the open, engaged position (AG1 or AH1 only). Depress the release button (see figure above). Align the body with the actuator to ensure the stem is inserted into the large mating hole on the bottom side of the actuator. Engage the actuator on the body and release the button.

Do not use the valve body to manually open the actuator as damage to the valve actuator will result.

Checkout

Make sure the valve stem rotates freely before and after installing the actuator. If the stem does not operate freely it may indicate that the stem was damaged and may require that the valve be repaired or replaced. After the piping is under pressure, check the valve body and the connections for leaks. After the valve and actuator are installed, power the actuator and check the operation.

Maintenance

PopTop Series two position spring return valves are maintenance free. Replace defective modules. Actuator may be replaced without removing the valve. Regular maintenance of the total system is recomended to ensure sustained, optimum performance.

Field Repair

Replace any damaged or failed components with a new valve body or actuator.

1.888.610.7664 www.calcert.com sales@calcert.com

Piping Diagrams

2-Way Valve with Normally Closed Actuators

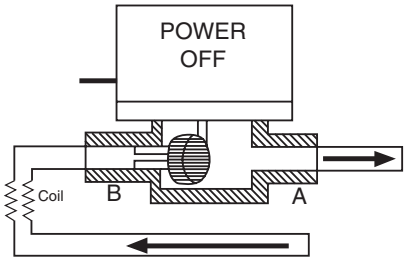

2-Way Valve with Normally Open Actuators

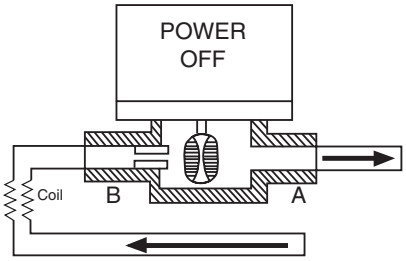

3-Way Valve in Mixing Configuration, Normally Closed to the Coil

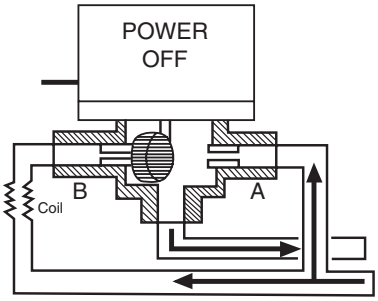

3-Way Valve in Mixing Configuration, Normally Open to the Coil

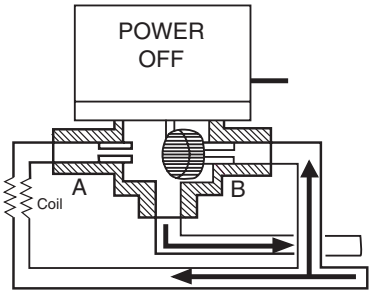

3-Way Valve in Diverting Configuration, Normally Closed to the Coil

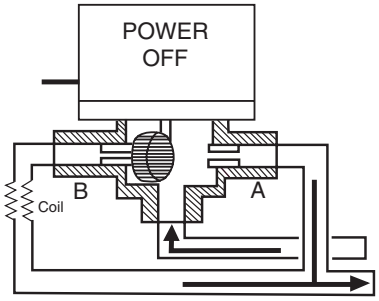

3-Way Valve in Diverting Configuration Normally Closed to the Coil

3-Way Valve in Diverting Configuration, Normally Open to the Coil

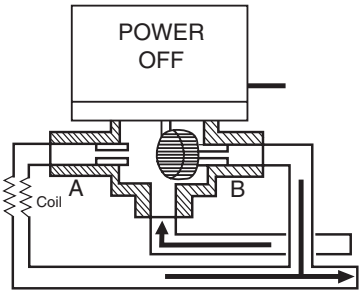

3-Way Valve in Diverting Configuration Normally Open to the Coil

Note: Normally Close actuators only when using 3-way valves.

1.888.610.7664 www.calcert.com sales@calcert.com

Part Numbering System
Two Position Zone Valves, Spring Return Actuators

V X X X X X X X X X XX X (1) (2)

Body Type & Temperature
T = On/Off (General)
S = On/Off (Steam)
High temperature actuator must be used.

Configuration
2 = 2-Way
3 = 3-Way

Valve Size
2 = 1/2"
3 = 3/4"
4 = 1"
5= 1-1/4"

Connection Type (3)	Availability
1 = Sweat	1/2", 3/4", 1", 1-1/4"
2 = Threaded NPT	1/2", 3/4", 1"
3 = Threaded Rp (metric)	1/2", 3/4", 1"
4 = Inverted Flare (Retrofit)	3/4"
5 = SAE Flare	1/2"

Options
0 = No Options
A = End Switch (4) (5) (6)

Electrical Leads
00 = 6" Motor Wires
01 = Terminal Block with End Switch (General Temp., 24 VAC only) (5)
02 = 18" (Standard) Wire Leads

Voltage
A = 24 VAC, 50/60 HZ
B = 110 VAC, 60 HZ, 120 VAC, 50 HZ
D = 208 VAC, 50/60 HZ
T = 277 VAC, 50/60 HZ
U = 230 VAC, 50 HZ and 240 VAC, 60 HZ

Temperature Ratings
3 = General Temperature
4 = High Temperature

Spring Return	Availability
1 = Normally Closed	2-way and 3-way
2 = Normally Open	2-way only

Actuator Type
G = On/Off (General Close-Off)
H = On/Off (High Close-off)

CV Size

No.	2-way	3-way	Size	Connection Type
1 =	1.0	1.5	1/2"	1, 2, 3, 5
			3/4"	4
2 =	2.5	3.0	1/2"	1, 2, 3, 5
			3/4"	1, 2, 3, 4
3 =	3.5	4.0	1/2"	1, 2, 3, 5
			3/4"	1, 2, 3, 4
			1"	1
5 =	5.0	5.0	3/4"	1, 2, 3
			1"	1
7 =	7.5	7.5	3/4"	1, 2, 3
	8.0	8.0	1"	1, 2, 3
			1-1/4"	1

(1) When ordering valve body only: use the first six positions to configure the valve.

(2) When ordering actuator only use the last seven positions to configure the actuator. Prefix with the letter "A".

(3) Inverted flare fittings must be ordered separately. See actuator accessories for fitting part numbers.

(4) End switch is not available for 277 Vac models if actuator temperature rating is high temperature (4).

(5) Actuators with Terminal blocks require endswitch and the endswitch is 24 Vac @ 101 mA min. -5A max.

(6) End switch is 24 - 240Vac @ 101 mA min. to 5 A max. and 9-30 Vdc @ 100 mA max for actautors rated 240V or less. End switch is 277Vac @ 101 mA min. to 5A max for actuators rated 277V.

Body & Actuator Combination Requirements

Temperature Configurations

Body Configuration
V T X X X X
T = General
S = Steam
If body configuration is T, actuator temp rating can be 3 or 4.
If body configuration is S, actuator temp rating must be 4.

Actuator Spring Return Mode
A X X 3 X X X X
3 = General Temperature
4 = High Temperature
If actuator temp rating is 3, body style must be T.
If actuator temp rating is 4, body style can be S or T.

1.888.610.7664 www.calcert.com sales@calcert.com