HIOKI

New

RESISTANCE HiTESTER RM3542/RM3542-01

Component measuring instruments

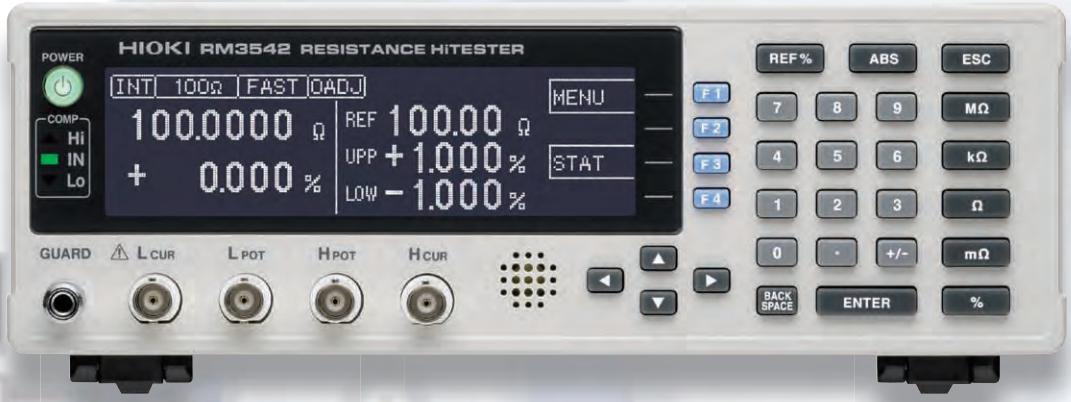

CE

Measure in as little as 0.9 ms*

High-Speed Resistance Meters Optimized for Automated Systems

The **RM3542** and **RM3542-01** Resistance HiTESTERs employ the four-terminal DC method to quickly and accurately measure the resistance of components such as resistors and ferrite bead inductors. Both models include advanced contact-check, comparator, and data export functions. The intuitive user interface and superb noise immunity are ideal for use with taping machines and separators.

* including contact checking

ISO 9001 JMI-0216

ISO14001 JQA-E-90091

www.hioki.com

HIOKI company overview, new products, environmental considerations and other information are available on our website.

1.888.610.7664 www.calcert.com sales@calcert.com

Equipped with Contact Improver and contact check functions

Reliable Resistance Measurement, Ideal for Automated Systems

RESISTANCE HiTESTER
RM3542/RM3542-01

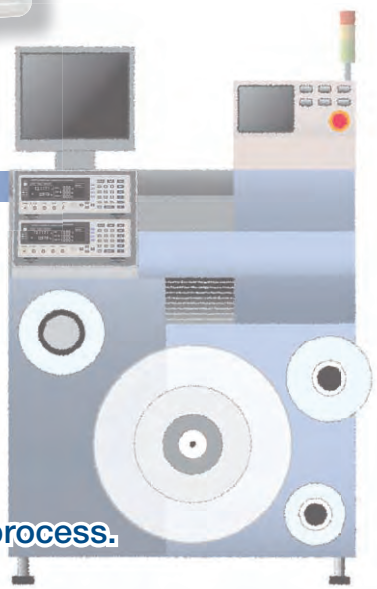

■ Features

- ■ High speed and accuracy maximize productivity in automated systems.
- ■ Multiple checking functions ensure proper contact for reliable measurements.
- ■ Low-power resistance mode measures chip inductors and EMC suppression components.
- ■ Supports sample inspections during the manufacturing process.

1. Ultra high-speed and accurate resistance meter ideal for incorporation in automated systems.

● Ultra Fast, Accurate Resistance Measurements Maximize Productivity

With FAST measurement speed selected, measure resistance in as little as 0.9 ms*1 (including contact improvement, contact check and measurement) to decision output. Measure F-class (±1%) resistors at high speed. Use SLOW measurement speed to measure B-class (±0.1%) resistors in sync with the mains frequency.

*1. In 100 or 1000 Ω measurement range, FAST speed, with low-power function disabled.

● Comparator Functions

Compare measurements against a specified reference value or range, with decision results available as signal outputs. User-friendly entry of comparator numerical values ensures smooth and reliable setting operations.

● Store and Export Measured

Up to 30,000 measurements can be stored in internal memory. Stored data can be exported to a computer as a batch, or used for statistical calculations.

● Seven-Digit High-Resolution Display (“1,200,000”)

Perform high-resolution measurements on all E192-series resistance values, including B-class resistor testing.

● Multiple Interfaces

The RM3542 and RM3542-01 include an EXT I/O handler interface, RS-232C and Settings Monitor connections to easily connect to automated systems. Model RM3542-01 also includes GP-IB for building high-end measurement systems.

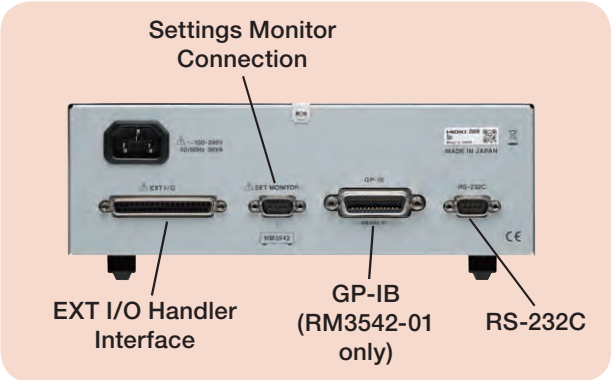

Absolute Contact

2. Positive contact assures reliable measurements.

Always-On Contact Checking

High-speed, reliable measurements are achieved by performing contact checks while measuring (instead of before and after, as done until now).

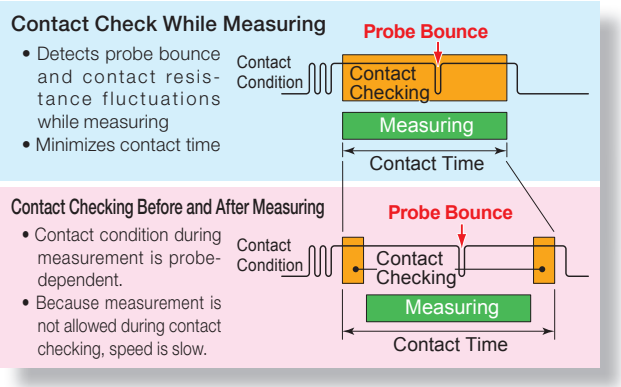

Voltage Monitor Function Monitors Contact Condition Changes

The Voltage Monitor function detects large voltage fluctuations due to changes in current terminal contact resistance or noise from mechanical vibrations as contact errors. This increases the reliability of the measured values.

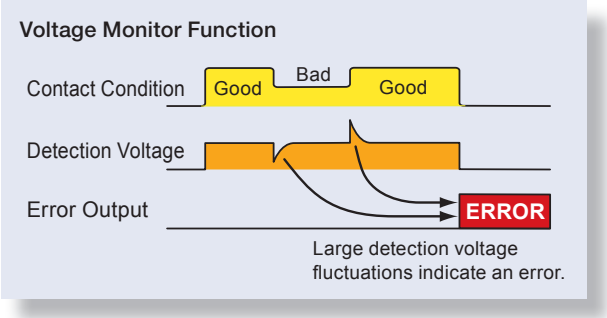

Contact Improver Function Makes Reliable Contacts Quickly

The "Contact Improver" function improves bad contacts between probes and test samples. Contacts errors are reduced by penetrating oxidation and impurities between probes and samples.
Reducing contact errors can increase productivity and quality.
The intensity of the Contact Improver function can be adjusted to suit the probe type.

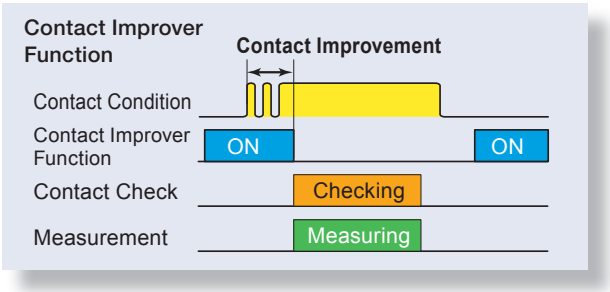

Retry Function Re-Measures After Faults

The Retry function automatically retries measurement when a fault occurs due to probe chatter. This can decrease the contact error rate and contribute to productivity improvement.

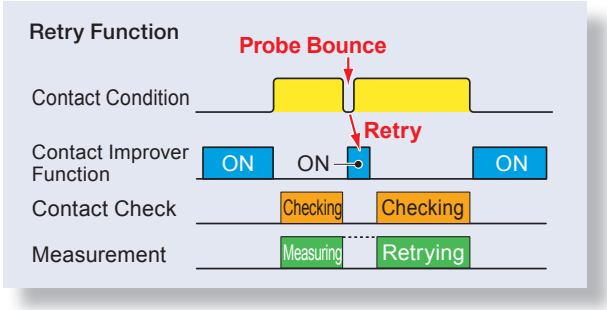

Probe Short-Circuit Detection Function Ensures Reliable Four-Terminal Measurements

A conductive foreign object between the POT and CUR probe tips inhibits reliable four-terminal measurements. Short-circuited probe anomalies are detected by checking the resistance between these tips when not measuring.

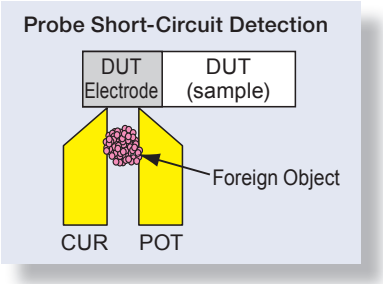

Settings Monitor Function Minimizes Risk of Human Error

When using two instruments, a difference in settings disables TRIG input and causes warning notification.
This function eliminates setting mistakes caused by human error.

Ultra Fast and Accurate Resistance Measurement

3. HIOKI's core technology achieves ultra fast and accurate measurements.

Fast Measurements with Excellent Reproducibility

Scatter of Actual Measurement Data

Comparison of actual data scatter at slow, medium and fast measurement speeds, showing only slight differences from the reproducibility of the slow setting.

Minimal scattering achieves ultra-accurate resistance measurements suiting the 1,200,000 digit display while maximizing reproducibility.

100 mΩ Range
SLOW/MED/FAST Scatter Comparison

1000 Ω Range
SLOW/MED/FAST Scatter Comparison

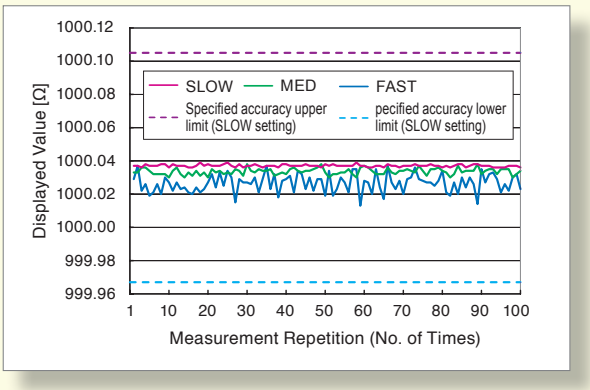

Auto Compensation Function Supports Accurate Measurements

OVC (Offset Voltage Compensation)

Thermal EMF occurs at the contact point of different metals. This voltage affects measurements, and if large enough, can cause measurement errors. The offset voltage compensation function minimizes the effect of thermal EMF to maintain measurement accuracy. Particularly when measuring low resistances where the detection voltage is small, and during low-power resistance measurements, OVC is essential to maintain accuracy.

Self-Calibration

To maintain accuracy, self-calibration automatically corrects for offset voltage and gain drift of the internal circuitry, and minimizes the effect of changes in ambient temperature and other time-dependent variables. Self-calibration is performed every ten minutes starting when the instrument is turned on, and whenever measurement settings are changed.
Triggers occurring during self-calibration are automatically delayed until calibration is finished. When measuring at the time self-calibration is to be performed, calibration is delayed until the measurement is finished. By syncing with the EOM signal, measurements can continue without disruption by the calibration process.

Power Engineering Supports High Precision Measurements

Strong immunity to noise and mains voltage fluctuations!

Measurement values are unaffected even in the presence of ±1.5kV power line noise. The floating measurement circuit design is highly impervious to electrical noise, minimizing the effect on measured values even in noisy environments, such as near large switching inductors.
The free-range AC input (90 to 264 V) is practically unaffected by voltage fluctuations, so stable measurements are possible even in poor power environments.

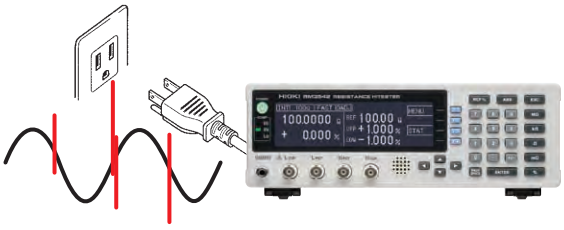

Auto-Sensed Power Line Frequency

Measuring in sync with the power line frequency is important for achieving accurate measurements. To avoid measurement problems from incorrect setting, the power line frequency is automatically sensed and selected (50 or 60 Hz).

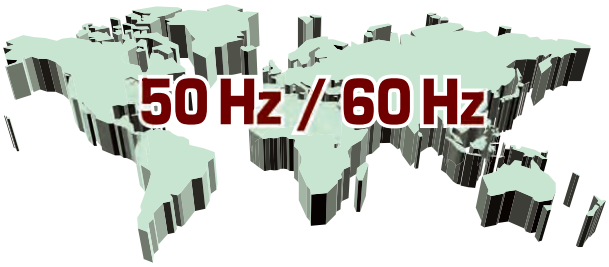

Meeting a Variety of Resistance Measurement Applications

4. Supports resistance measurements of chip inductors, EMC suppression components, and shunts.

Low-Power Resistance Measurement Mode Included

For ranges from 1000 mΩ to 1000 Ω, low-power resistance measurement is provided to minimize measurement current. Low-power resistance measurement provides accurate measurements using the thermal EMF compensation (OVC) function. Stable measurements are available even of components that are otherwise difficult to measure with high current, such as ferrite-bead and multilayer inductors*.

* Inductors cannot be measured in the 1000 Ω to 100 MΩ ranges (Low-Power mode is disabled).

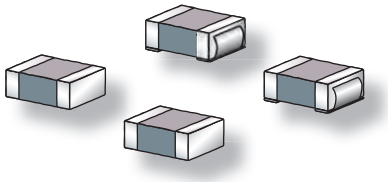

Low Resistance Measurement

Measure small resistances such as shunts and PTC thermistors. The 100 mΩ range provides 100 nΩ measurement resolution.

5. Ideal for sample inspections during the manufacturing process

High-Speed Data Output and Large Memory

Measurement data can be transferred at 5 ms per value using the RS-232C interface and the data output (export) function. Values are sent automatically at the end of triggered measurements. Up to 30,000 values can be stored, and for quality control, all data can be downloaded at the end of measuring each reel. This function is ideal for system setup, debugging and process management.

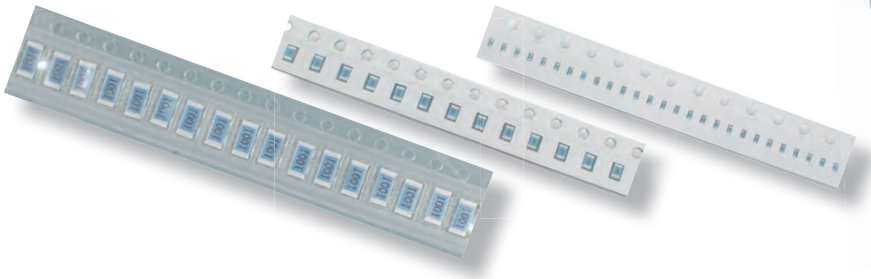

Auto-Memory Function

In chip resistor manufacturing, the auto-memory function is convenient for sample inspections after screen printing.
Measured values are automatically acquired and simultaneously subjected to statistical calculation as soon as they stabilize.
When the specified number of measurements is acquired, a beep sounds and memory storage stops. Press PRINT to print measured values and statistical calculation results. (Printing requires the optional printer. The probe shown at the right is the optional, special-purpose Pin Type Lead 9771.)

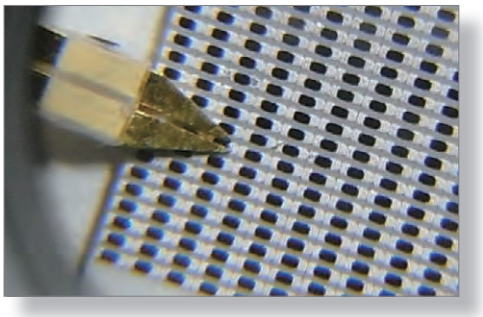

Statistical Calculation Functions

To facilitate observation of process conditions, the mean (x), maximum (Max), minimum (Min), overall standard deviation (σ), standard deviation of sample (s), and process productivity indices (Cp: dispersion, CpK: bias) can be calculated using up to the maximum of 30,000 stored measurements.

Data Printing

Measurement values, measurement values including judgment decisions, and statistical calculation results can be printed with the optional Printer 9670.

Printer 9670

Printer 9670 Specifications

Print method:	Thermal line dot
Print width:	72 mm
Print speed:	47.5 mm/s
Power:	AC Adapter 9671 or Battery Pack 9672
Size and Weight:	Approx. 119W×77H×174D mm, 500g

Printer operation requires AC Adapter 9671 and RS-232C Cable 9638.
Battery operation requires Battery Pack 9672 and Charger 9673.

1.888.610.7664 www.calcert.com sales@calcert.com

6. Engineered with the speed and accuracy required for automated systems

Total Productivity Supported by Fast and Accurate Measurements

• Provides the speed and accuracy required for automated systems Contact to decision output in as little as 0.9 ms. Contact improvement, measurement and contact checking, and decision output are all completed within this interval.

• All data can be imported in real time using the 38.4-kbps RS-232C interface.
• Model RM3542-01 also includes a GP-IB interface.

Measurement Times

(1) With Low Power disabled*1

Values in parenthesis are for 50 Hz (where timing depends on line frequency), units are in milliseconds

Range	Measurement Speed		
	FAST	MED	SLOW
100mΩ	3.8	13	36 (43)
1000mΩ	2.0	6.4	35 (41)
10Ω	1.6	6.0	34 (41)
100Ω	0.9	3.6	17 (21)
1000Ω	0.9	3.6	17 (21)
10kΩ	1.0	3.6	17 (21)
100kΩ	1.3	3.8	18 (21)
1000kΩ	2.5	6.0	18 (21)
10MΩ	5.3	20 (23)	20 (23)
100MΩ	22 (26)	39 (46)	72 (86)

Tolerance: ±10% ±0.2 ms

(2) With Low Power enabled*1

Values in parenthesis are for 50 Hz (where timing depends on line frequency), units are in milliseconds

Range	Measurement Speed		
	FAST	MED	SLOW
1000mΩ	2.5	12	35 (42)
10Ω	2.5	12	35 (42)
100Ω	1.7	6.1	34 (41)
1000Ω	7.2	12	40 (47)

Tolerance: ±10% ±0.2 ms

*1. Under default settings except those specified, without retries.

EXT I/O Handler Interface

For noise immunity, the EXT I/O handler interface is isolated from the measurement and control circuits.

Example of Typical EXT I/O Timing

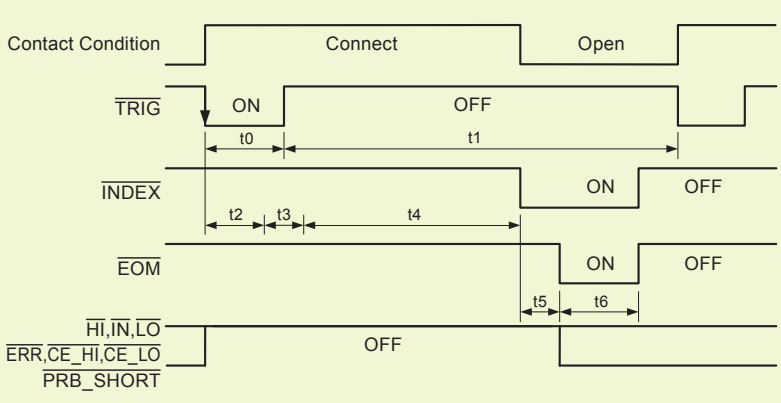

t0: Trigger pulse on time; at least 0.1 ms
t1: Trigger pulse off time; at least 0.1 ms
t2: Delay 1; 0 to 100 ms (per setting)
t3: Delay 2; 0 to 100 ms (per setting)
t4: Measurement time; 0.1 to 100 ms (per sampling speed, OVC on/off, delay, and line frequency)
t5: Calculation time; 0.1 ms
t6: EOM pulse width; 1 to 100 ms (per setting)

EXT I/O Input and Output Circuits

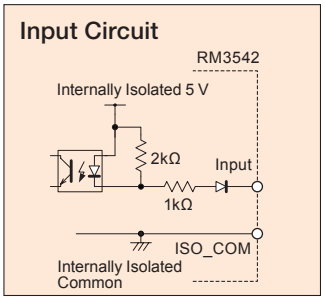

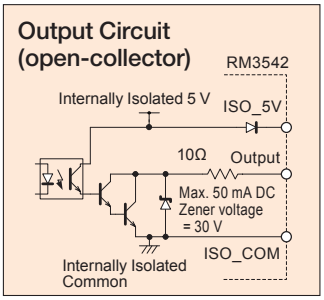

Example of Typical

Input Signals

TRIG	: External trigger
HOLD	: Hold
KEY_LOCK	: Key-Lock
0ADJ	: Zero-Adjust
PRINT	: Print
CAL	: Self-Calibration
PRB_CHECK	: Probe Short-Circuit Detection

Output Signals

HI	: Comparator Hi
IN	: Comparator IN
LO	: Comparator Lo
EOM	: End of Measurement
INDEX	: End of Import
ERR	: Measurement Fault Output
PRB_SHORT	: Probe short-circuit error
CE_HI	: Probe (HI sense) contact error
CE_LO	: Probe (LO sense) contact error
ISO_5V	: Internally Isolated 5 V
ISO_COM	: Internally Isolated Common

EXT I/O Electrical Specifications

Inputs:
Photocoupler isolation: Non-voltage contact inputs
Assert: 0 to 1 V (with 3 mA input)
De-assert: Open, or 5 to 30 V

Outputs:
Photocoupler isolation: Open-collector NPN Max. 30 V and 50 mA per ch.
Residual voltage: Max. 1.5 V @50 mA, or 1 V @10 mA.

Accessory Power Out (internally powered):
4.5 to 5 V DC @ 100 mA max.
Isolated from protective ground and measurement circuitry

1.888.610.7664 www.calcert.com sales@calcert.com

Multiple Test Fixture Options

Various fixtures available to suite the type of components to measure

Noise-suppressing BNC-type measurement jacks are employed.
Ready availability and easy assembly ensure smooth system setup.
A variety of test fixtures for HIOKI LCR HiTESTERs can also be used.

4-TERMINAL PROBE 9140
Cable length: 1 m

TEST FIXTURE 9262
Residual resistance: 10 mΩ or less

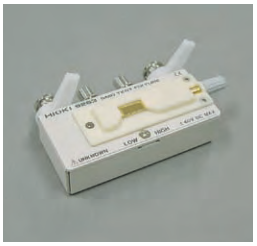

SMD TEST FIXTURE 9263
Sample size: 1 to 10 mm
Residual resistance: 10 mΩ or less

Recommended Measurement Cable Specifications

Conductor resistance	500 mΩ/m or less
Capacitance	150 pF/m or less
Length	2m or less
Specific examples	JIS std. 3C-2V and 1.5D-2V, MIL std. RG-58A/U

RM3542 Measurement Accuracy

(1) Resistance Measurement (Low-Power OFF) [1-year accuracy (@23 ±5ºC, 80% RH or less)]

Accuracy = ±(% rdg. + % f.s.)
(f.s. = calculated 1,000,000 dgt., where 0.001% f.s. = 10 dgt.)

Example. 0.015 + 0.008 ..... 0.015% rdg. + 0.008% f.s.

Range	Maximum display Value*1	Resolution	FAST	MEDIUM	SLOW	Measurement Current*2	Open-Circuit Voltage
100mΩ	120.0000mΩ	100nΩ	0.015+0.008	0.015+0.003	0.015+0.002	100mA	20Vmax*3,*4
1000mΩ	1200.000mΩ	1μΩ	0.012+0.003	0.012+0.002	0.012+0.001	100mA	
10Ω	12.00000Ω	10μΩ	0.010+0.003	0.008+0.002	0.008+0.001	10mA	
100Ω	120.0000Ω	100μΩ	0.009+0.003	0.007+0.002	0.007+0.001	10mA	
1000Ω	1200.000Ω	1mΩ	0.008+0.003	0.006+0.002	0.006+0.001	1mA	
10kΩ	12.00000kΩ	10mΩ	0.009+0.003	0.007+0.002	0.007+0.001	1mA	
100kΩ	120.0000kΩ	100mΩ	0.010+0.003	0.007+0.002	0.007+0.001	100μA	
1000kΩ	1200.000kΩ	1Ω	0.010+0.003	0.008+0.002	0.008+0.001	10μA	
10MΩ	12.00000MΩ	10Ω	0.030+0.004			1μA	
100MΩ	120.0000MΩ	100Ω	0.100+0.020			100nA	

Resistance Measurement (Low-Power ON) [1-year accuracy (@23 ±5ºC, 80% RH or less)]

Range	Maximum display Value*1	Resolution	FAST	MEDIUM	SLOW	Measurement Current*2	Open-Circuit Voltage
1000mΩ	1200.000mΩ	1μΩ	0.010+0.008	0.008+0.003	0.008+0.002	10mA	20Vmax*3,*4
10Ω	12.00000Ω	10μΩ	0.010+0.008	0.008+0.003	0.008+0.002	1mA	
100Ω	120.0000Ω	100μΩ	0.010+0.003	0.008+0.002	0.008+0.001	1mA	
1000Ω	1200.000Ω	1mΩ	0.020+0.003	0.008+0.002	0.008+0.001	100μA	

*1. Negative values can be up to 10% of positive full scale.
*2. Measurement current accuracy is ±5%.
*3. Voltage when not measuring is 20 mV or less, with current mode set at PULSE and Contact Improver Setting set at OFF/PULSE (measured with a voltmeter having 10 MΩ).
*4. With the sum of resistances of the cables, sample, and contacts less than (open-circuit voltage) / (measurement current).
Example. 100 mA measurement current can be used when the sum of resistances of the cables, sample, and contacts is no more than 20 Ω.

Conditions of Guaranteed Accuracy

- After 30-minute warm-up time
- Add ±(0.1% measurement accuracy)/ºC to the above between 0 and 18ºC, and between 28 and 40ºC, respectively
- Temperature variation after self-calibration must be within ±2ºC.

1.888.610.7664 www.calcert.com sales@calcert.com

RM3542 Specifications

Measurement types	Four-terminal resistance measurement 0.0000 mΩ (100 mΩ range) to 120.0000 MΩ Low-power four-terminal resistance measurement 0.000 mΩ (1000 mΩ range) to 1200.000 Ω
Measurement method	Four-terminal, constant-current DC Measurement terminals: 22-mm BNC female jacks
Range switching	Comparator on: Auto-range setting according to comparator reference or upper threshold setting. Comparator off: Manual range setting
Zero-Adjust	Range: -1 to 10 Ω (wiring resistance compensation for two-terminal measurements)
Trigger	Internal or External
Sampling	Fast, Medium, and Slow
Integration time setting function*1	0.1 to 100.0 ms, PLC*2 setting available 1 to 5 PLC @ 50 Hz, 1 to 6 PLC @60 Hz *2. One PLC = one power line cycle (mains waveform period)
Delay	DELAY1 = Set to allow for mechanical delay of trigger input and probing (affects all ranges), from 0.0 to 100.0 ms DELAY2*1 = Set to allow for measurement object response (each range independently), from 0.0 to 100.0 ms
Functions	Self-calibration, probe short-circuit detection, Contact Improver, current mode setting, OVC (offset voltage compensation), settings monitor, retry, statistical calculations, key-lock, comparator (relative tolerance or absolute range modes), EOM pulse width setting, data export, export data format, auto-memory
Measurement fault detection functions	Out-of-range detection, contact check, current monitor, voltage monitor
Memory storage	30,000 values (volatile memory, no backup)
Interfaces	EXT I/O, RS-232C, Printer, Settings Monitor Functional terminals (SET MONITOR) GP-IB (Model RM5342-01)
RS-232C bit rates	9,600, 19,600, or 38,400 bps

*1. Settable for each range independently

RM3542 General Specifications

Operating temperature and humidity	0 to 40ºC, 80% RH or less (non-condensating)
Storage temperature and humidity	10 to 50ºC, 80% RH or less (non-condensating)
Temperature and humidity range for guaranteed accuracy	23 ±5ºC, 80% RH or less (non-condensating)
Operating environment	Indoors, Pollution Degree 2, up to 2,000 m ASL
Rated mains supply voltage	100 to 240 V AC ±10%
Rated mains supply frequency	50 / 60 Hz
Power consumption	30 VA
Insulation withstand potential	1.69 kV AC for 15s, with 10 mA cutoff current Between all mains supply terminals and protective ground, interfaces, and measurement jacks
Dimensions	Approx. 260W × 88H × 300D mm (without projections)
Weight	Approx. 2.9 kg
Accessories	One each power cord, EXT I/O male plug
Applicable Standards	Safety EN61010-1 EMC EN61326 EN61000-3-2 EN61000-3-3

Odering information

RESISTANCE HiTESTER RM3542

RESISTANCE HiTESTER RM3542-01 (with GP-IB interface)

Test fixtures are not supplied with the unit.
Select an optional test fixture when ordering.

● Optional accessories

FOUR-TERMINAL PROBE 9140
TEST FIXTURE 9262 (direct connection type)
SMD TEST FIXTURE 9263 (direct connection type)
GP-IB CONNECTION CABLE 9151-02 (2m)
PRINTER 9670
AC ADAPTER 9671 (for 9670)
BATTERY PACK 9672 (for 9670)
BATTERY CHARGER 9673 (for 9672)
RECORDING PAPER 9237 (80 mm × 25 m, 4 rolls)
RS-232C CABLE 9638 (9pin-25pin/cross/1.8m)

HIOKI
HIOKI E. E. CORPORATION

1.888.610.7664 www.calcert.com sales@calcert.com