OSAE-Series
OS-AE11 Model

OMEGA™

Compact Fixed IR Sensor with Adjustable Emissivity, 6 Digit LCD and Analog Output

Features

- Temperature range: 0ºC ~ 500ºC
- Optical resolution up to 20:1
- 6-digit backlit LCD display
- 150 ms response time
- 4 ~ 20mA Analog output
- Adjustable Emissivity
- 0.1ºC Resolution
- Rugged IP 65 aluminum housing
- Power Cable included

General

Environmental Rating	IP 65 (NEMA - 4)
Ambient Temperature	0ºC to 70ºC
Storage Temperature	-20ºC to 80ºC
Relative Humidity	10 to 95%, non-condensing
Cable Temperature	-20ºC to 80ºC
Weight	200g

Electrical

Analog Output	4 ~ 20mA
Digital Output	none
Minimum Load Impedance (V)	10 KΩ
Maximum Loop Resistance (A)	500 Ω
Power Supply	24 VDC ± 20%
Current Draw	max. 100 mA
Display	6 digit backlit LCD display
Cable Length	3m options : 5m or 10m

Measurement

Temperature Range	0ºC ~ 500ºC (32ºF to 932ºF)
Spectral Response	8 ~ 14 µm
Optics Resolution (90% energy)	20:1
Accuracy*[1]	±1% of reading or ±1.5ºC, whichever is greater
Repeatability*[1]	±0.5% of reading or ±1ºC, whichever is greater
Temperature Resolution	0.1ºC
Response Time (95% signal)	150 ms
Emissivity (adjustable)	0.100 ~ 1.000 (adjustable)
Signal processing	peak hold, valley hold, average
Display	6-Digit LCD

Dimensions(mm)

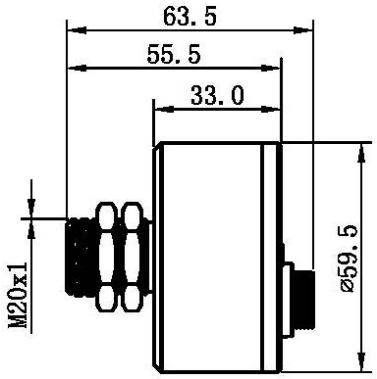

Optional Accessories

OS- FMB

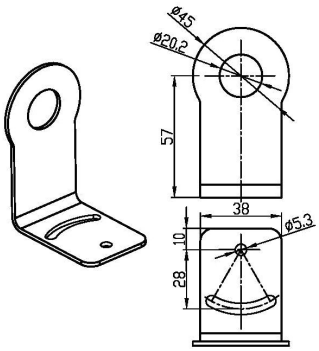

OS - AMB

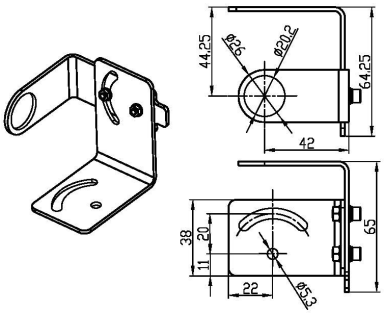

Optical Specifications

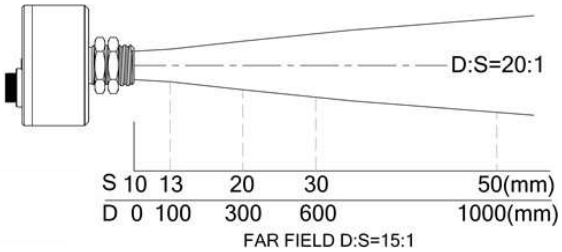
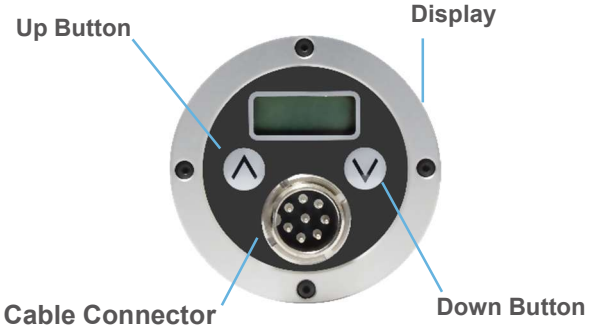
OS-AE11 Model