Series MPC

Pump Controller

One or Two Pump Control with Built-In Alternation, Over Temperature Protection and Seal Failure Monitoring

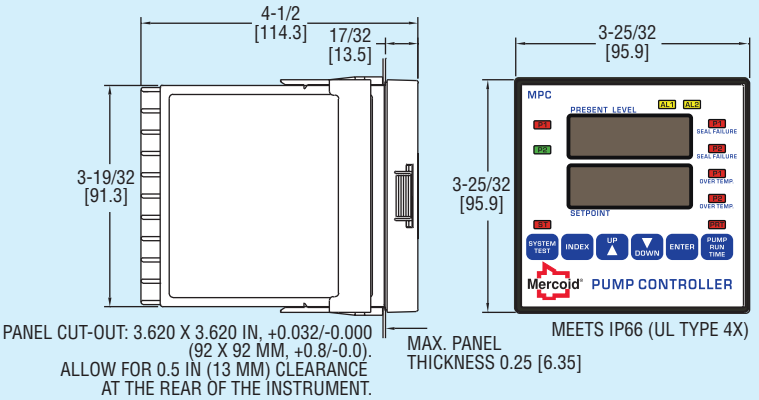

The Mercoid® MPC Pump Controller provides versatile level control in a standard 1/4 DIN package. Designed for use with almost any style level transmitter the unit displays the present level and main set point value. Incorporated in the MPC is programmable level differential for on/off control of one or two pumps, valves, or other devices through two SPDT relays. Also featured are two additional programmable alarm contacts with front alarm light indication.

The MPC is flexible and incorporates a user-friendly programming menu. The front face meets NEMA 4X (IP66) for outdoor panel mounting. So many features are combined into the MPC that it eliminates many components in a pump control system.

FEATURES

- Selectable pump alternation when used with two pumps to minimize pump wear. With alternation "on" a seal failure or over temperature condition will force the non-failed pump to lead status and stop alternation.
- When used with a submersible pump including a moisture sensor th MPC has alarm light indication of seal failure.
- When used with a pump including a thermostat the MPC has alarm light indication of pump over temperature and removes the pump from service. The pump can be brought back into service automatically or by manual reset when the pump has cooled down.
- Alarms can be programmed for output indication of pump seal failure or over temperature.
- Selectable time delay, for pump two, on power up to prevent both pumps from starting at the same time. If power is lost, upon regaining power a time delay of up to 60 seconds can be selected to prevent too large of a current draw.
- Integral 24 VDC power supply for level transmitter.
- Displays pump run time from a front panel button.
- Test system function that simulates the process input to ensure the pumps are operating or to test programming.
- User selectable security lock-out of programming and/or set points.
- Process input retransmission as a current (4 to 20 mA) or voltage (2 to 10 VDC) analog signal*.

*Standard model MPC is set for current retransmission. For voltage retransmission add suffix "-RV".

ACCESSORY

Weatherproof Enclosures, NEMA 4X (IP66).❶

A-901

SPECIFICATIONS

Inputs: 4 (or 0) to 20 mA DC or 2 (or 0) to 10 VDC selectable.
Input Impedance: Current = 10 Ω; Voltage = 100 K Ω.
Output Ratings:
Control relays: SPDT, rated 10A @ 240 VAC res., 1/4 hp @ 120 VAC, 1/3 hp @ 240 VAC;
Alarm relays: SPST, 3A @ 240 VAC res., 1/10 hp @ 120 VAC.
Control Type: On/off, reverse (pump out) or direct (pump in) acting.
Power Requirements: 100 to 240 VAC nominal, +10%-15%, 50 to 400 Hz, single phase; 132 to 240 VDC nominal, +10%-15%.
Power Consumption: 7.5 VA maximum.
Accuracy: ±0.25% of span, ±1 least significant digit.
Display: Two 4 digit, 7 segment 0.56″ high LED's.
Display Resolution: 1 count.
Memory Backup: Nonvolatile memory (no batteries required).
Serial Communications: Optional RS-232 or RS-485 with Modbus® protocol.
Ambient Operating Temperature/RH: 14 to 131°F (-10 to 55°C)/0 to 90% up to 104°F (40°C) non-condensing, 10 to 50% at 131°F (55°C) non-condensing.
Weight: 16 oz. (454 g).
Front Panel Rating: Meets UL Type 4X (IP66).
Loop Power Supply (isolated): 24 VDC @ 50 mA, regulated.
Seal Failure (Moisture Sensor):
Power: 2.5 VDC;
Search Current: 3 micro amps;
Resolution: 10K to 500K Ω in 10K Ω steps.
Agency Approvals: CE, cUL, UL.

Series MPC, Pump Controller

OPTIONS

RS-232 Modbus®-RTU Serial Communications.
Add suffix – **232**

RS-485 Modbus®-RTU Serial Communications.
Add suffix – **485**

Modbus® is a registered trademark of Schneider Automation, Inc.

Compatible Level Transmitters: See page 318 (Series SBLT2)
See page 320 (Series PBLT2)
Additional Digital Control Panel Meters: See page 346 (Series APM)
See page 347 (Series MPM)
See page 348 (Series PPM)
❶See page 351 (Series A-900 & A-901)