HIOKI

Communication Instruction Manual

IM7580A

IM7580A-1
IM7580A-2

IM7581

IM7581-01
IM7581-02

IM7583

IM7583-01
IM7583-02

IM7585

IM7585-01
IM7585-02

IMPEDANCE ANALYZER

EN

* 6 0 0 4 5 5 0 0 1 *

1.888.610.7664 www.calcert.com sales@calcert.com

Contents

Introduction.....1
Safety Information 1

Chapter 1 Specifications 3

1.1 RS-232C Specifications 3
1.2 GP-IB Specifications 4
1.3 USB Specifications 4
1.4 LAN Specifications 4

Chapter 2 Connection and Setting 5

2.1 Overview of Communication 5
2.2 USB Settings and Connection 7
■Setting USB 7
■Connecting the USB Cable 8
2.3 LAN Settings and Connection 9
■LAN Settings 9
■Connecting a LAN Cable 14
2.4 GP-IB Connection and Settings
(when the Z3000 is connected) 15
■Connecting the GP-IB Cable 15
■Setting GP-IB 15
2.5 RS-232C Connection and Settings
(when the Z3001 is connected) 17
■Connecting the RS-232C Cable 17
■Setting RS-232C 18
2.6 Remote Mode 19

Appendix A 1

Appendix 1Checking the USB Virtual COM Port ..... A 1

1.888.610.7664 www.calcert.com sales@calcert.com

Introduction

This instruction manual provides details on the communication interfaces of the IM7580A series, IM7581 series, IM7583 series and IM7585 series Impedance Analyzer.
In this document, the "instrument" means the IM7580A series, IM7581 series, IM7583 series and IM7585 series.

Safety Information

This manual contains information and warnings essential for safe operation of the instrument and for maintaining it in safe operating condition. Before using it, be sure to carefully read the following safety precautions.

Safety Symbols

The following symbols in this manual indicate the relative importance of cautions and warnings.

⚠WARNING	Indicates that incorrect operation presents a significant hazard that could result in serious injury or death to the user.
⚠CAUTION	Indicates that incorrect operation presents a possibility of injury to the user or damage to the product.
NOTE	Advisory items related to performance or correct operation of the product.

Notation

Symbols in this manual

🚫	Indicates the prohibited action.
(**p.**)	Indicates the location of reference information.
*	Indicates that descriptive information is provided below.
[ ]	Menus, commands, dialogs, buttons in a dialog, and other names on the screen and the keys are indicated in brackets.
CURSOR (**Bold character**)	Bold characters within the text indicate operating key labels.
Windows	Unless otherwise specified, “Windows” represents Windows Vista, Windows 7, Windows 8 or Windows 10.
Dialogue	Dialogue box represents a Windows dialog box.

Mouse Operation

Click:	Press and quickly release the left button of the mouse.
Right-click:	Press and quickly release the right button of the mouse.
Double click:	Quickly click the left button of the mouse twice.
Drag:	While holding down the left button of the mouse, move the mouse and then release the left button to deposit the chosen item in the desired position.

1.888.610.7664 www.calcert.com sales@calcert.com

Specifications Chapter 1

1.1 RS-232C Specifications

Transmission Method		Communication method: Full duplex Synchronous method: Start-stop synchronization
Transmission Speed		9600 bps, 19200 bps, 38400 bps, 57600 bps
Data Bits		8 bits
Parity		None
Stop bit		1 bits
Message terminator (delimiter)		CR+LF, CR
Flow control		Software (XON/XOFF control) "Handshake (About Buffer Flow Control)" (p.3)
Electrical Specifications	Input voltage level	5 to 15 V ..... ON -15 to -5 V ..... OFF
	Output voltage level	5 to 9 V ..... ON -9 to -5 V ..... OFF

Handshake (About Buffer Flow Control)

Control during Receiving

XON/XOFF control:

- When the data in the receive buffer exceeds 75% of the buffer, XOFF(13H) is sent and the controller is notified that there is not much space remaining in the buffer.
- Processing of the data in the buffer continues, and then XON(11H) is sent and the controller is notified that there is sufficient remaining space in the buffer when the amount of data becomes less than 25%.

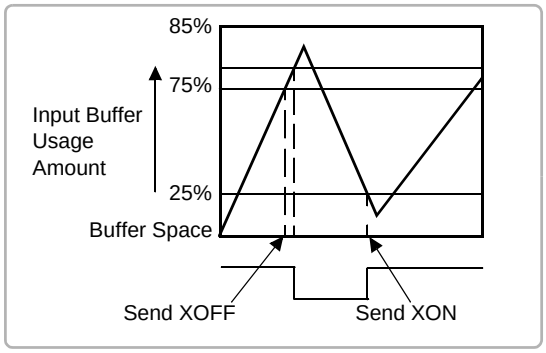

Control during Sending

XON/XOFF control:

- When XOFF is received, the sending of data is halted. When XON is received, the sending of data is resumed.

1.2 GP-IB Specifications

SH1	Supports all source handshake functions.
AH1	Supports all acceptor handshake functions.
T6	Supports standard talker functions. Supports serial poll functions. Talk only mode is not supported. Supports the talker cancel function by MLA (My Listen Address).
L4	Supports standard listener functions. Listener only mode is not supported. Supports the listener cancel function by MTA (My Talk Address).
SR1	Supports all service request functions.
RL1	Supports all remote/local functions.
PP0	Parallel poll functions are not supported.
DC1	Supports all device clear functions.
DT1	Supports all device trigger functions.
C0	Controller functions are not supported.

Code used: ASCII code

1.3 USB Specifications

Connector	Series B receptacle
Compliance standard	USB2.0 (Full Speed/High Speed)
No. of ports	1
Class	Communication class
Supported OS	Windows Vista, Windows 7 , Windows 8, Windows 10

1.4 LAN Specifications

Connector	RJ-45 connector × 1
Compliance standard	IEEE 802.3-compliant Ethernet
Transfer system	10BASE-T/ 100BASE-TX/ 1000BASE-T Auto detected
Protocol	TCP/IP
Function	Command control

1.888.610.7664 www.calcert.com sales@calcert.com

Connection and Setting

Chapter 2

2.1 Overview of Communication

You can control the instrument with communication commands from a computer via the USB, GP-IB, RS-232C and LAN interfaces.
There are the following four communication methods. To enable communication, the communication conditions need to be set on the instrument.

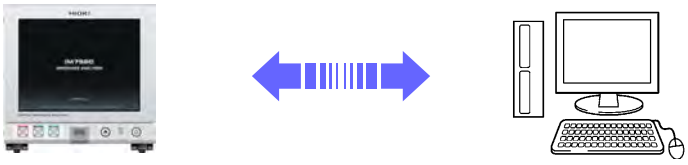

USB communication (p.7)

The instrument is communication class compatible.

LAN communication (p.9)

Command control using the TCP/IP protocol is possible.

GP-IB communication (when the Z3000 is connected) (p.15)

- Commands common to IEEE-488-2 1987 (requirement) can be used.
- The instrument has been designed with reference to the following standard. (Reference standard: IEEE-488.2 1987)

RS-232C communication (when the Z3001 is connected) (p.17)

WARNING

- **Always turn both devices OFF when connecting and disconnecting an interface connector. Otherwise, an electric shock accident may occur.**
- **To avoid damage to the instrument, do not short-circuit the terminal and do not input voltage to the terminal.**
- **Failure to fasten the connectors properly may result is sub-specification performance or damage to the equipment.**

1.888.610.7664 www.calcert.com sales@calcert.com

Screen Displayed while Setting Interfaces

When you set an interface, the icon for the set interface is displayed on the right side of the screen.

2.2 USB Settings and Connection

NOTE To connect the instrument to a computer the first time, a dedicated USB driver must be installed. Before connecting the instrument to the computer, install the USB driver.
The USB driver can be downloaded from the bundled CD, or our web site.(http://www.hioki.com)
The USB driver is compatible with the Windows Vista (32-bit, 64-bit version), Windows 7 (32-bit, 64-bit version), Windows 8 (32-bit, 64-bit version) and Windows 10 (32-bit, 64-bit version) operating systems.
Additionally, do not put the computer into the sleep state while the instrument is connected to the computer.

Setting USB

The display will vary with the installed options.

Procedure

You can configure the setting from any of LCR mode and ANALYZER mode.

1 LCR Measurement Screen

Interface Settings

2 USB Setting

Press USB .

3 USB Setting

Select the terminator setting.

CR+LF	CR+LF
CR	CR

4 **Press** EXIT **to confirm the setting.**

Connecting the USB Cable

Connect a USB cable (commercially available USB cable) to the USB port of the instrument.

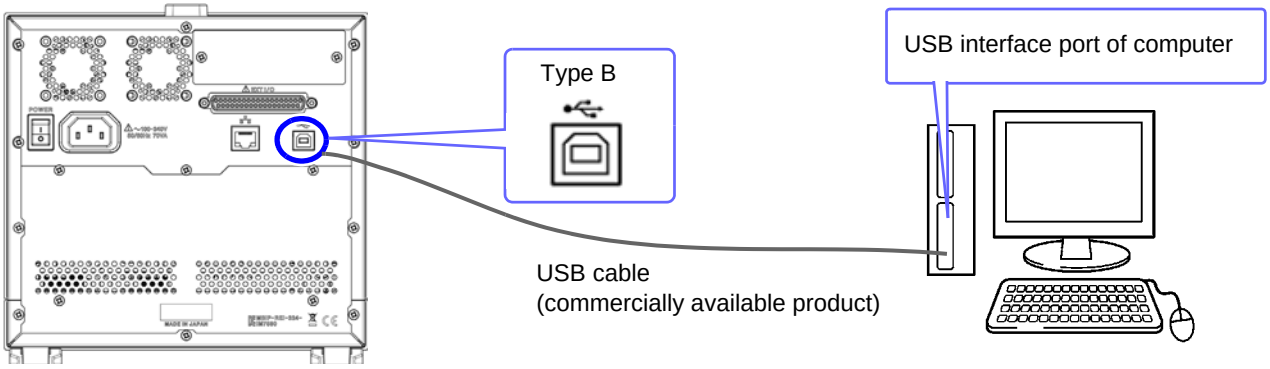

CAUTION

- **To avoid faults, do not disconnect or reconnect the USB cable during instrument operation.**
- **Connect the instrument and the computer to a common earth ground. Using different grounds could result in potential difference between the instrument and the computer. Potential difference on the USB cable can result in malfunctions and faults.**
- **Do not disconnect or connect other USB devices from or to, respectively, PC during USB communications between instrument and computer. The USB communications between instrument and PC may stop.**

2.3 LAN Settings and Connection

LAN Settings

You can perform command control using the TCP/IP protocol.
Set the instrument to match your network environment in advance.

NOTE
- Make these settings before connecting to a network. Changing settings while connected can duplicate IP addresses of other network devices, and incorrect address information may otherwise be presented to the network.
- The instrument does not support DHCP (automatic IP address assignment) on a network.

Setting Items

IP address	Identifies each device connected on a network. Each network device must be set to a unique address. The instrument supports IP version 4, with IP addresses indicated as four decimal octets, e.g., "192.168.0.1".
Subnet mask	This setting is for separating the IP address into the network address that indicates the network and the host address that indicates the instrument. On this instrument, the subnet mask is represented as four decimal numbers separated by ". " such as "255.255.255.0."
Default Gateway	When the computer and instrument are on different but overlapping networks (subnets), this IP address specifies the device to serve as the gateway between the networks. If the computer and instrument are connected one-to-one, no gateway is used, and the instrument's default setting "0.0.0.0" can be kept as is.

Network Environment Configuration

Example 1. Connecting the instrument to an existing network

When connecting the instrument to an existing network, the network settings need to be confirmed in advance.
An IP address which is not the same as that of another network device needs to be assigned.
Confirm the following items with the network administrator, and write them down.

IP Address _____.____.____.____
Subnet Mask _____.____.____.____
Default Gateway _____.____.____.____

Example 2. Connecting multiple instruments to a single computer using a hub

When building a local network with no outside connection, the following private IP addresses are recommended.
Example of private IP address:
IP Address ..... Computer: 192.168.0.100
Instrument: 192.168.0.1, 192.168.0.2, 192.168.0.3...
(Set an IP address that differs from that of other network devices.)
Subnet Mask..... 255.255.255.0
Default Gateway ..... OFF(0.0.0.0)

Example 3. Connecting one instrument to a single computer using the 9642 LAN Cable

The 9642 LAN Cable can be used with its supplied connection adapter to connect one instrument to one computer, in which case the IP address is freely settable. Use the recommended private IP addresses.
IP Address ..... Computer: 192.168.0.100
Instrument: 192.168.0.1 (Set to a different IP address than the computer.)
Subnet Mask..... 255.255.255.0
Default Gateway ..... OFF(0.0.0.0)

1.888.610.7664 www.calcert.com sales@calcert.com

Procedure

You can configure the setting from any of LCR mode and ANALYZER mode.

1 LCR Measurement Screen

Interface Settings

2 LAN Settings

Press LAN **.**

3 LAN Settings

Select the IP address.

4 IP address Settings

Use ▲ or ▼ to set the IP address.

Press EXIT to confirm the setting.

5 LAN Settings

Select the subnet mask.

6 Subnet mask Settings

Use ▲ or ▼ to set the subnet mask, and press EXIT to confirm the setting.

NOTE Any of the following 30 subnet masks can be set for the instrument.

128.000.000.000	255.128.000.000	255.255.128.000	255.255.255.128
192.000.000.000	255.192.000.000	255.255.192.000	255.255.255.192
224.000.000.000	255.224.000.000	255.255.224.000	255.255.255.224
240.000.000.000	255.240.000.000	255.255.240.000	255.255.255.240
248.000.000.000	255.248.000.000	255.255.248.000	255.255.255.248
252.000.000.000	255.252.000.000	255.255.252.000	255.255.255.252
254.000.000.000	255.254.000.000	255.255.254.000	
255.000.000.000	255.255.000.000	255.255.255.000 (Initial setting)	

1.888.610.7664 www.calcert.com sales@calcert.com

7 LAN Settings

Select the default gateway.

If the default gateway does not need to be set, for example, when connecting the instrument and computer on a one-to-one basis using a cross cable, leave this set to OFF.

8 Default gateway Settings

Use ▲ or ▼ to set the default gateway.

Press EXIT to confirm the setting.

9 LAN Settings

Select the port number.

10 Port number Settings

Use ▲ or ▼ to set the port number to use for communication commands.

Settable range : 1024 to 65535

Press EXIT to confirm the setting.

11 LAN Settings

Select the terminator setting.

CR+LF	CR+LF
CR	CR

12 **Press EXIT to confirm the setting.**

Connecting a LAN Cable

Use a LAN cable to connect the instrument and computer.

Required items:

When connecting the instrument to an existing network (prepare any of the following):
- Straight-through Cat 5, 1000BASE-T-compliant Ethernet cable (up to 100 m, commercially available). For 100BASE/10BASE communication, a 100BASE-TX/10BASE-T-compliant cable may also be used.
- Hioki 9642 LAN Cable (option)
  (A cross adapter cannot be used.)

When connecting one instrument to a single computer (prepare one of the following):
- 1000BASE-T-compliant cross-over cable (up to 100 m)
- 1000BASE-T-compliant straight-through cable with cross-over adapter (up to 100 m)
- Hioki 9642 LAN Cable (option)

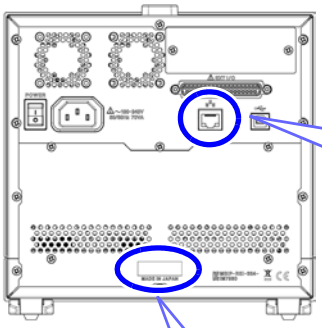

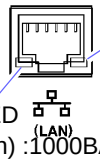

LINK UP LED
On: Link up
Off: Link down
Blinking: Sending or receiving data

SPEED LED
On (Green) :1000BASE
On (Orange) :100BASE
Off:10BASE

The MAC address of the LAN is displayed below the serial number.
You can also check it on the instrument screen.
See: "Checking the Version of the Instrument" in the instruction manual.

When connecting the instrument to a single computer (connect the instrument to the computer)

Connecting with the 9642 LAN Cable and crossover adapter (supplied with the 9642)

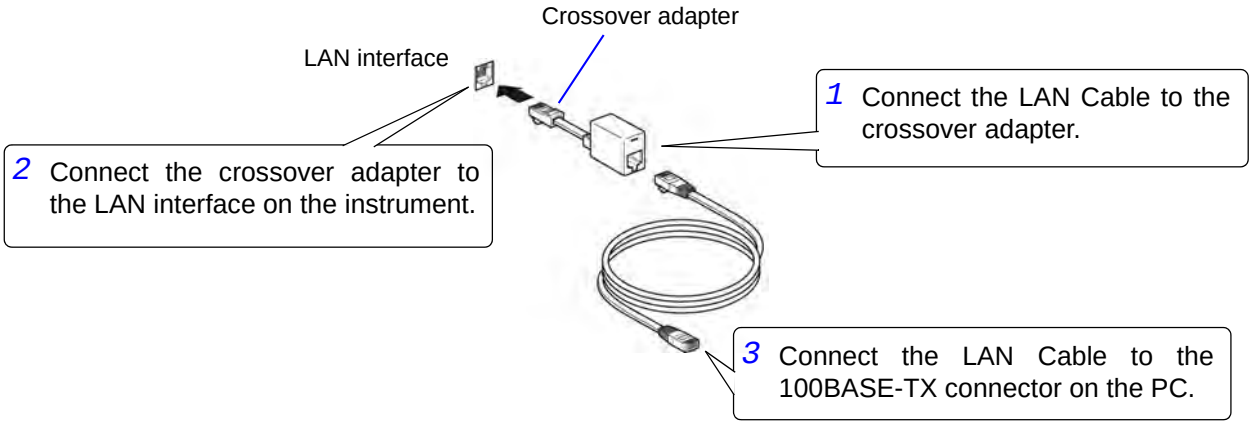

2.4 GP-IB Connection and Settings (when the Z3000 is connected)

Connecting the GP-IB Cable

Connect the GP-IB cable to the GP-IB connector.

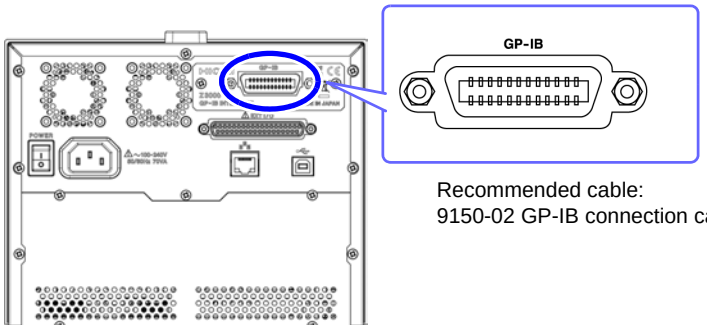

Recommended cable:
9150-02 GP-IB connection cable (2 m)

Setting GP-IB

Procedure

You can configure the setting from any of LCR mode and ANALYZER mode.

1

LCR Measurement Screen

Interface Settings

2

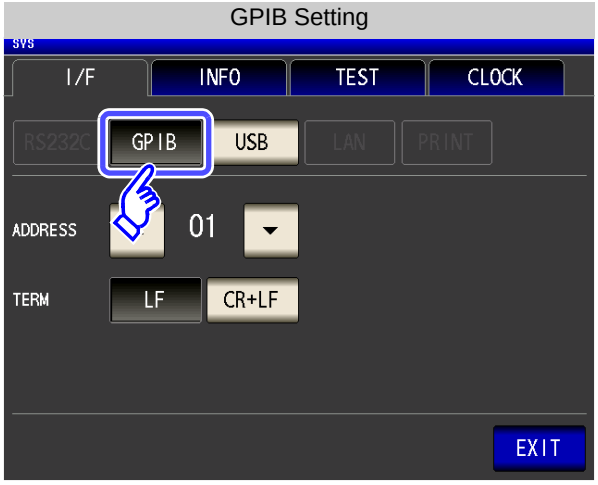

Press GPIB **.**

3

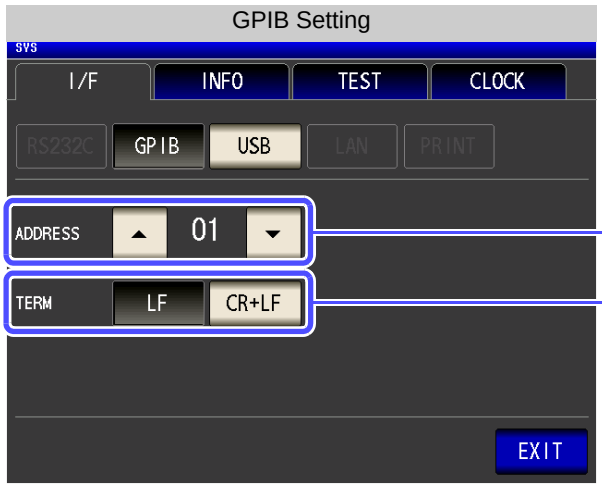

Use ▲ **or** ▼ **to set the GP-IB address.**

Select the terminator setting.

LF	LF with EOI
CR+LF	LF with CR+EOI

4 **Press** EXIT **to confirm the setting.**

2.5 RS-232C Connection and Settings (when the Z3001 is connected)

Connecting the RS-232C Cable

Connect the RS-232C cable to the RS-232C connector.
(Recommended cable: 9637 RS-232C cable)

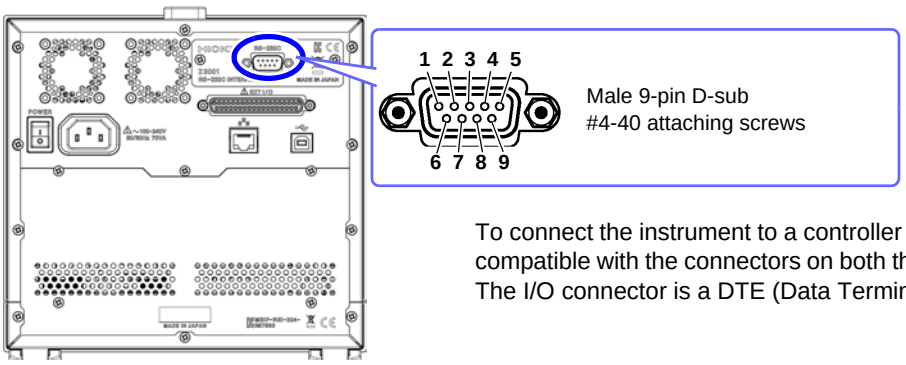

To connect the instrument to a controller (DTE), use a **crossover cable** compatible with the connectors on both the instrument and the controller. The I/O connector is a DTE (Data Terminal Equipment) configuration.

Connector (D-sub) Pin No.	Interchange Circuit Name	CCITT Circuit No.	EIA Abbreviation	JIS Abbreviation	Common Abbreviation
1	Unused				
2	Received Data	104	BB	RD	RxD
3	Transmitted Data	103	BA	SD	TxD
4	Data Terminal Ready	108/2	CD	ER	DTR
5	Signal Ground	102	AB	SG	GND
6	Unused				
7	Unused				
8	Unused				
9	Unused				

Example: Connecting to a DOS/V PC

Specification: D-sub 9-pin female and female connector, reverse connection

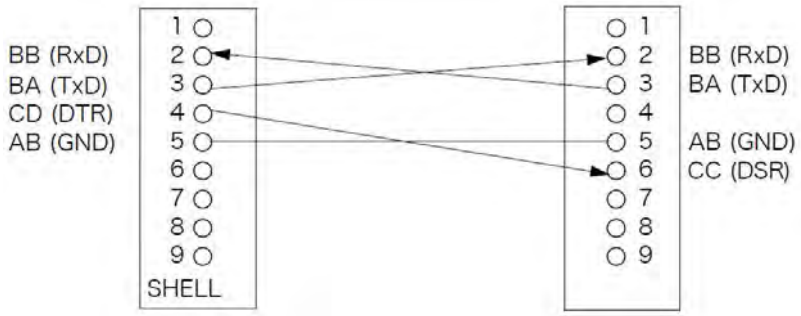

Setting RS-232C

Procedure

You can configure the setting from any of LCR mode and ANALYZER mode.

1 LCR Measurement Screen

Interface Settings

2 RS-232C Settings

Press RS232C **.**

3 RS-232C Settings

Select the baud rate setting.

Select the handshake setting.

OFF	No flow control
XON/OFF	Software (XON/XOFF control)

Select the terminator setting.

CR+LF	CR+LF
CR	CR

4 **Press** EXIT **to confirm the setting.**

2.6 Remote Mode

When you connect a device to an interface and start communication, the mode becomes remote mode (remote operation state) and the keys on the LCD are disabled.

Remote Mode State

All of the keys except LOCAL are disabled.

Canceling Remote Mode

Procedure

1 Local State

Press LOCAL to return to the normal state (local state).

2 LCR Measurement Screen

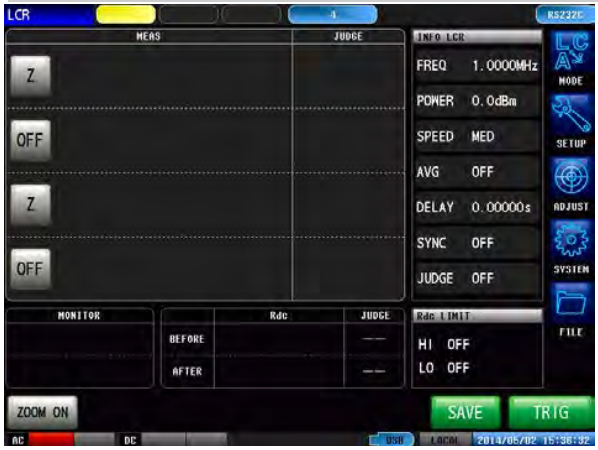

The measurement screen is redisplayed.

Appendix

Appendix 1 Checking the USB Virtual COM Port

The instrument's USB interface supports communications-class performance, allowing control operations on par with RS-232C to be performed from a computer. When you connect the instrument to a computer and set its interface to USB, it will be recognized as a virtual COM port on the computer.

Device Manager starts.

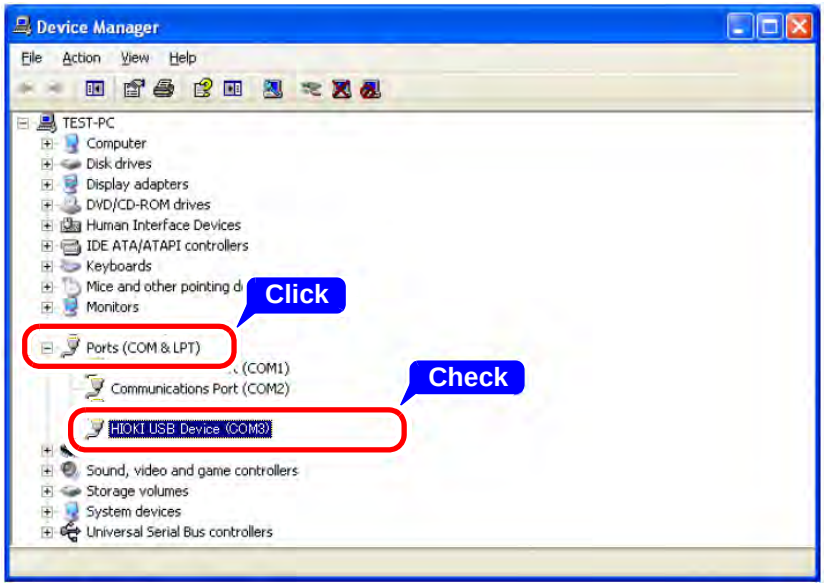

Check the COM number to the right of "HIOKI USB Device" in the **[Ports (COM & LPT)]** list.

NOTE The procedure to start Device Manager differs depending on the version of the Windows operating system.
For details, refer to Help of the operating system.