MONARCH INSTRUMENT

Instruction Manual

DataChart™ DC1250

2-Channel Paperless Recorder

CE

1.888.610.7664 www.calcert.com sales@calcert.com

SAFEGUARDS AND PRECAUTIONS

Read and follow all instructions in this manual carefully, and retain this manual for future reference.

Do not use this instrument in any manner inconsistent with these operating instructions or under any conditions that exceed the environmental specifications stated.

Be sure the power supplied to this instrument matches the specification indicated on the rear panel on the instrument.

Be sure all power is removed before making or removing any connections to or from this instrument.

This instrument is not user serviceable. For technical assistance, contact the sales organization from which you purchased the product.

In order to comply with EU Directive 2012/19/EU on Waste Electrical and Electronic Equipment (WEEE): This product may contain material which could be hazardous to human health and the environment. DO NOT DISPOSE of this product as unsorted municipal waste. This product needs to be RECYCLED in accordance with local regulations; contact your local authorities for more information. This product may be returnable to your distributor for recycling; contact the distributor for details.

Monarch Instrument's Limited Warranty applies.

Warranty Registration and Extended Warranty Coverage information is available online.

TABLE OF CONTENTS:

1.0 INTRODUCTION 1
- 1.1 CHART SPEED TO SAMPLE SPEED 1
- 1.2 REVIEWING DATA 2
- 1.3 ZOOMING AND CONDITIONING DATA 3
- 1.4 CUSTOMIZING 3
- 1.5 TRIGGERING 4
- 1.6 THE GRAPHICS LCD 4
- 1.7 OTHER GRAPHIC MODES 7

2.0 INSTALLATION AND SETUP 9
- 2.1 UNPACKING 9
  - 2.1.1 Initial Inspection 9
  - 2.1.2 Unpacking Procedure 9
  - 2.1.3 Detected Damage 9
  - 2.1.4 Equipment Return 9
  - 2.1.5 Storage 9
- 2.2 INSTALLATION 10
  - 2.2.1 Panel Mounting 11
  - 2.3.1 Power Connections 13
  - 2.3.2 Input Signal Connections 14
  - 2.3.3 Relay Output Connections 16
  - 2.3.4 Digital Input 16
  - 2.3.5 USB Port (Option) 17
  - 2.3.6 ETHERNET Port (Option) 17
  - 2.3.7 Isolated DC input (Option) 17
  - 2.3.8 Cleaning 17
- 2.4 INPUT SCALING 18
- 2.5 ALARMS 19
  - 2.5.1 Alarm Types 19
  - 2.5.2 Setting Alarms 20
  - 2.5.3 Alarm Indication 21
- 2.6 MEMORY CARDS 22
  - 2.6.1 Care of the Data Cards 22
  - 2.6.2 Card Storage Capacity and Data Type 22

3.0 BASIC OPERATING INSTRUCTIONS 23
3.1 BASIC MODE OF OPERATION 23
3.2 VIEWING HISTORIC DATA 23
3.3 COMPRESSING AND EXPANDING DATA (TREND VIEWING) 24
3.4 ZOOMING DATA (AMPLIFICATION) 25
3.5 MENU MODE 26
3.5.1 EXIT! 26
3.5.2 ALARM RESET! 26
3.5.3 RESET TOTAL 27
3.5.4 RECORD MODE 27
3.5.5 CURSOR ID! 28
3.5.6 VIEW FILE 28
3.5.7 CARD STATUS 29
3.5.8 INFO! 29
3.5.9 SAMPLE RATE 30
3.5.10 PASSWORD (PROTECTION) 30
3.5.11 ADV. SETUP (ADVANCED SETUP) 31
3.5.12 DISPLAY ADJ (ADJUST) 31
3.6 EVENT TRIGGERING 32
3.7 STATUS LINE INDICATORS 32
3.8 ENTERING DATA 33
3.9 TOP LEVEL MENU OVERVIEW 34
4.0 ADVANCED SETUP 35
4.1 CHANNEL SETUP 36
4.2 ALARMS 39
4.3 RELAYS 40
4.4 DISPLAY 41
4.5 DATA CARD 43
4.6 CLOCK 44
4.7 BEEPER 45
4.8 SAMPLE TRIGGER 46
4.9 RECORD TRIGGER 46
4.10 EXTERNAL INPUT 47
4.11 ALT. LANG 48
4.12 UNIT TAG 49
4.13 COMMS 49

5.0 MISCELLANEOUS 50
5.1 BATTERY BACKUP OPTION 50
5.2 ETHERNET OPTION 50
5.3 CALIBRATION 52
5.3.1 Basic Calibration 53
5.3.2 Examples 54
6.0 SPECIFICATIONS 57
6.1 COMPLIANCE 59
7.0 ACCESSORIES/REPLACEMENT PARTS AND SENSORS 60
APPENDIX A: AVAILABLE TEXT CHARACTERS 61
APPENDIX B: ERROR AND INFORMATION MESSAGES 62
APPENDIX D: REPROGRAMMING FIRMWARE 65
APPENDIX E: TOTALIZER/COUNTER FUNCTIONS 66
APPENDIX F: ALTERNATE LANGUAGES 67

1.0 INTRODUCTION

This instrument is a versatile solid-state data recorder/panel indicator. It has all the capability of a traditional paper recorder - variable chart speeds, the ability to review historic data, see trends and more, with a number of specific exceptions - NO PAPER to jam, no ink to smudge and no pens to clog or break. The data is stored on a CompactFlash® memory card, which can be easily transported.

The Recorder does all the regular functions a lot better, and the data can be transferred directly into reports, spreadsheets or analysis programs. Data can be examined and archived on any Windows® compatible machine and can be printed out in various formats as required.

This instrument has two universal inputs so it can measure voltage, current, thermocouples and RTDs by simply selecting them from the menu. It also has two potential free alarm output contacts and an isolated digital input. The display can be user configured to graphics, digital or a combination. Maximum data storage is 2 gigabytes. Communication options include USB and Ethernet ports.

Things are done a little differently in a paperless recorder and there are a few new concepts that you may need to become familiar with. There are more features and functions in this unit than you will probably use. It is recommended that you read this manual in its entirety before attempting to use the instrument.

The balance of this introduction will attempt to introduce some of the more unique features of this paperless recorder.

1.1 CHART SPEED TO SAMPLE SPEED

A major difference between paper and paperless is SAMPLE SPEED, which is analogous to CHART SPEED in the paper recorder. There is an apparent chart speed, the rate at which the samples appear to move across the Graphics Display, but unlike paper recorders the display is made up of discrete data points, each of which is a distinct sample of the data being measured. The rate of movement across the screen is thus a direct function of the sample rate. The major factor in deciding what sample rate to select is to know how much data is enough. In a paper recorder a chart speed of 1 inch per hour is fine for a process that does not vary very quickly but would result in a thick blur if trying to record a 1 Hz sine

wave. Unlike a paper recorder, every point recorded by the paperless recorder is uniquely identifiable, no matter how dense it appears on the screen. It is always better to have too much data than to have too little. The only consideration is the amount of space used in the memory card.

To relate chart speed to sample rate we need to consider how we plan to reproduce the data. The graphic LCD has a density of 70 pixels (data points) per inch; a typical dot matrix printer has 180 pixels per inch and a laser printer 300 pixels per inch. Thus to fill one inch of the display in one hour we need to sample at a rate of 70 samples per hour, a little over once per minute, however if this is now printed on a laser printer it will fill less than 1/3 of an inch. It is the amount and quality of the data that counts. Another advantage of the paperless recorder is that it can sample internally at 100 samples per second (one every 0.01 seconds). These samples can be averaged, or peaks or valleys can be detected and then this data can be stored at the chosen sample rate.

Trial and experience will yield the best sample speeds for the application. Start with a faster sampling rate than you think you will need; you can always slow it down in the future. As a rule of thumb, one sample every 10 seconds should give the equivalent information that 1 inch per hour of chart paper would.

1.2 REVIEWING DATA

One of the biggest features of this recorder is its ability to show historic data and trends. The data on the graphics screen can be rewound like a tape recorder, scrolling back in time, displaying past data on the screen while still recording data in real time.

The data can also be compressed on screen, showing a whole day or week's worth of recording on one screen, enabling trends or irregularities to be spotted easily. A data cursor can be moved around the screen to uniquely identify samples in both time and amplitude.

Refer to section 3 for the specifics on reviewing data.

1.3 ZOOMING AND CONDITIONING DATA

The recorder acquires data with greater resolution than can be displayed on the screen. The user has the ability to ZOOM in to amplify the data either 2 or 4 times, equivalent to using a magnifying glass on the display. These ZOOM windows can be scrolled up or down to cover the entire data spectrum. The vertical scale automatically adjusts to the zoom level and position to enable resolution of minor changes in input signal. See section CARD STATUS for more information.

The recorder also acquires data at a rate faster than what may be displayed on the screen. The user can set the sampling rate from 100 samples per second down to 1 sample every 10 minutes. When sampling slower than 100 samples per second, the recorder can be programmed to record the average, maximum or minimum values. Thus if a sample rate of 1 sample per minute is chosen, the recorder will still sample internally at 100 samples per second while computing the average or detect and store either the maximum (peak) value or minimum (valley) value, depending on the mode programmed. It will then store this value when the minute is up. Unless required otherwise, it is recommended that the average value be used for recording since this will tend to filter or smooth the data. See Advanced Setup Menu for details.

1.4 CUSTOMIZING

There are many operating features and parameters that the user can program. All settings are stored in nonvolatile memory and are recalled each time the unit is powered on. The display can be scaled to read in engineering units, and the trace can be labeled accordingly with up to three alphanumeric characters. Four alarms are fully user programmable and can be associated with either channel or the external input. The Alarm levels can be set in the engineering units of the display, the sense of the alarm, the type and the deadband or hysteresis can be individually set for each alarm. Optional relay outputs can be assigned independently to each alarm. A reset delay feature is also available.

There are other features which may be programmed by the user including the time stamping mode, either real time or elapsed time, clock update rates, file names, beeper operation etc. (Refer to Advanced Setup.)

1.5 TRIGGERING

The recorder has the ability to change sampling speeds and stop or start recording as a result of a triggered event. This event may be tied to any of the four internal alarms or optionally to an external signal. This enables the unit to monitor a process without recording or to record at a slow speed to conserve card space. When an external event or internal alarm condition occurs, the unit will begin recording or change to a higher sample rate for the data of interest. See section 3.6 EVENT TRIGGERING for more information.

1.6 THE GRAPHICS LCD

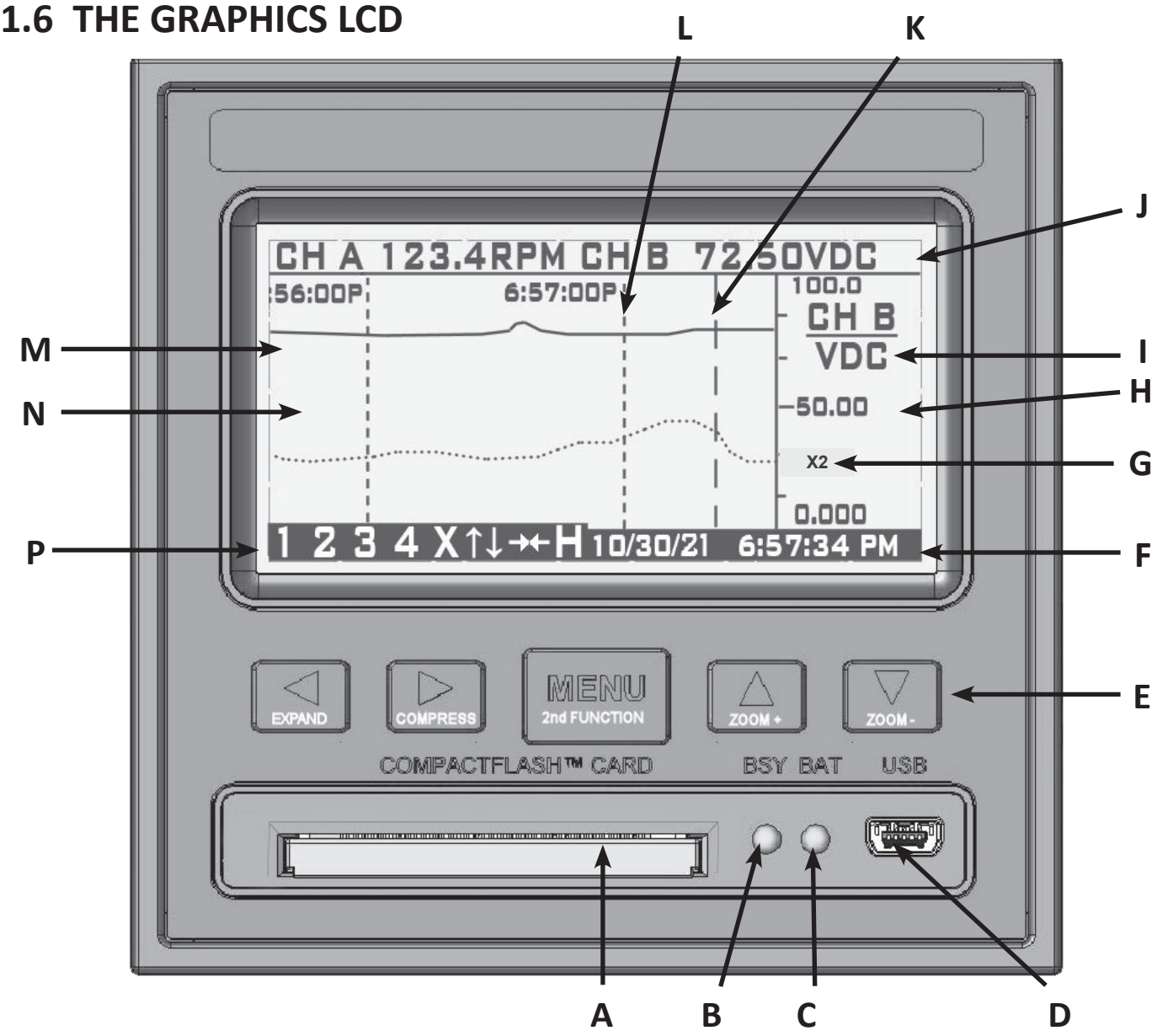

Figure 1.1 Recorder Front View — showing TREND Display

The diagram in Figure 1.1 is a representation of the recorder in the TREND mode. The alpha characters around the border point to various features of the unit and are described below. Not shown are the MENUS which pop up over the display. The menus are in the form of those shown in Sections 4 and 5. The numbers in parenthesis below refer to the section that covers the topic in detail.

A CompactFlash® card slot – Manually insert the card into the unit to store data and configuration information. This card can also be used as a means of updating the firmware in the unit. Cards up to 2 Gigabytes in size can be used.

The CompactFlash® cards are keyed and can only go into the recorder one way – face up or face down depending on when unit was built. DO NOT FORCE CARD INTO SLOT!

B Busy LED (Red) – Is on when the unit is recording and blinks rapidly whenever the unit is accessing the CompactFlash® card. The LED blinks at 1 second rate if the unit is triggered but not recording. **Do not attempt to remove the card when this light is on.**

C Power LED (Green) – Is on during normal operation. If the optional internal battery pack is present, this LED will blink during power failure to indicate the unit is running off internal batteries.

D Optional USB interface – enables connection to a Windows® compatible PC.

E Navigation buttons – are used to set up and navigate around the display. The buttons are all dual function; the second function is initiated by holding down the MENU button while pressing one of the other buttons. The second function is printed on each button.

F Date and Time – shows the actual time of day (real time). The time is displayed user selectable in 12 or 24 hour format. The user can also select European or American formats and auto daylight savings adjustment. See 4.6 CLOCK.

G Zoom Scale Indicator – shows the zoom scale for the channel indicated if > x1. Separate scale for each channel. See 3.4 ZOOMING DATA.

H The right-hand edge of the graphics area in which the traces are displayed. This is the vertical scale area designated by the scale values at the top, center and bottom of the scale. The most recent data that is displayed in digital form at the top of the display (J) is against the right edge of this scale and moves left with time - the most recent data is to the right and the oldest data is to the extreme left. New data appears against this margin and the oldest data disappears off the screen at the extreme left. The graphic cursor (K) will start against this right edge.

I Vertical Scale Identifier – this display alternates between Channel A and Channel B. It displays the Channel Tag and the Engineering units. See 4.1 CHANNEL SETUP.

J Digital Window – the top of the screen displays the values for each Channel including the Channel identifier, the current value and the engineering units. Channel A is displayed on the left and Channel B on the right. This window displays the absolute digital value of the instantaneous (last) reading for the channel, and is the right most sample value on the trend display (G), unless the cursor is active. In that case it shows the value at the point the cursor intersects the trend line.

K Cursor – is displayed when activated in the cursor ID mode. This cursor can be moved using the left ◀ and right ▶ arrow buttons. The values in the digital window (J) are the values at the point the cursor intersect the trend line.

L Date/Time Axis Delimiter – the dotted vertical lines placed at equal increments along the Horizontal axes (Time). The Date/Time stamp beside the line indicates the exact position of the line. Both date and time may be shut off or relocated vertically. These lines move with the trace at a speed dependent on the sampling speed. This is configurable in Display Setup.

M Channel B Trace – the trend line is the graphic representation of Time (horizontal) versus Amplitude (vertical) and is shown solid to distinguish it from the Channel A trace, which is shown as a dotted trend line. This is configurable in Display Setup.

N Graphic TREND Window – shows the channel traces, which may be compressed, expanded, zoomed, scrolled and halted.

P Status Icons – these icons appear at various times to indicate the status of the unit and the display. From left to right they are:

- The numbers 1,2,3 and 4 are the ALARM indicators - one for each alarm. The numbers are present when the alarm is enabled and will blink if the alarm is in an alarm condition.
- The X indicates the status of the EXTERNAL INPUT and is present when the external input is present.
- The →← icon indicates the display is compressed. The horizontal time stamps indicate the current compressed values. The display can function normally in compressed mode, may be paused or the user can scroll back and forth using the left ◀ and right ▶ arrow buttons.
- The **H** indicates the display is in the HOLD condition. While in HOLD, the trends do not update. The display enters the HOLD condition when the ID Cursor (K) is present or the user scrolls in the horizontal direction using the left ◀ and right ▶ arrow buttons. Exit the HOLD mode by pressing the MENU button.

DO NOT INSERT OR REMOVE THE CompactFlash® CARD WHILE THE BUSY LED IS ON!

1.7 OTHER GRAPHIC MODES

In addition to the full screen trend mode shown in section 1.6, there are two additional graphic display modes.

The Dual Digital mode, as shown in Figure 1.2, enables both channels to be shown as Digital values similar to a digital panel meter. The user has the option of showing the displays in normal or reverse video (shown) modes, and the display can be set to blink on Alarm Condition.

Figure 1.2 Dual Digital Graphic Mode

The other Graphic mode is a split screen with the trend in the top half and the digital display in the lower half as shown below. When selecting this mode, Channel B is the default digital value, but can be switched in the Advanced Setup menu.

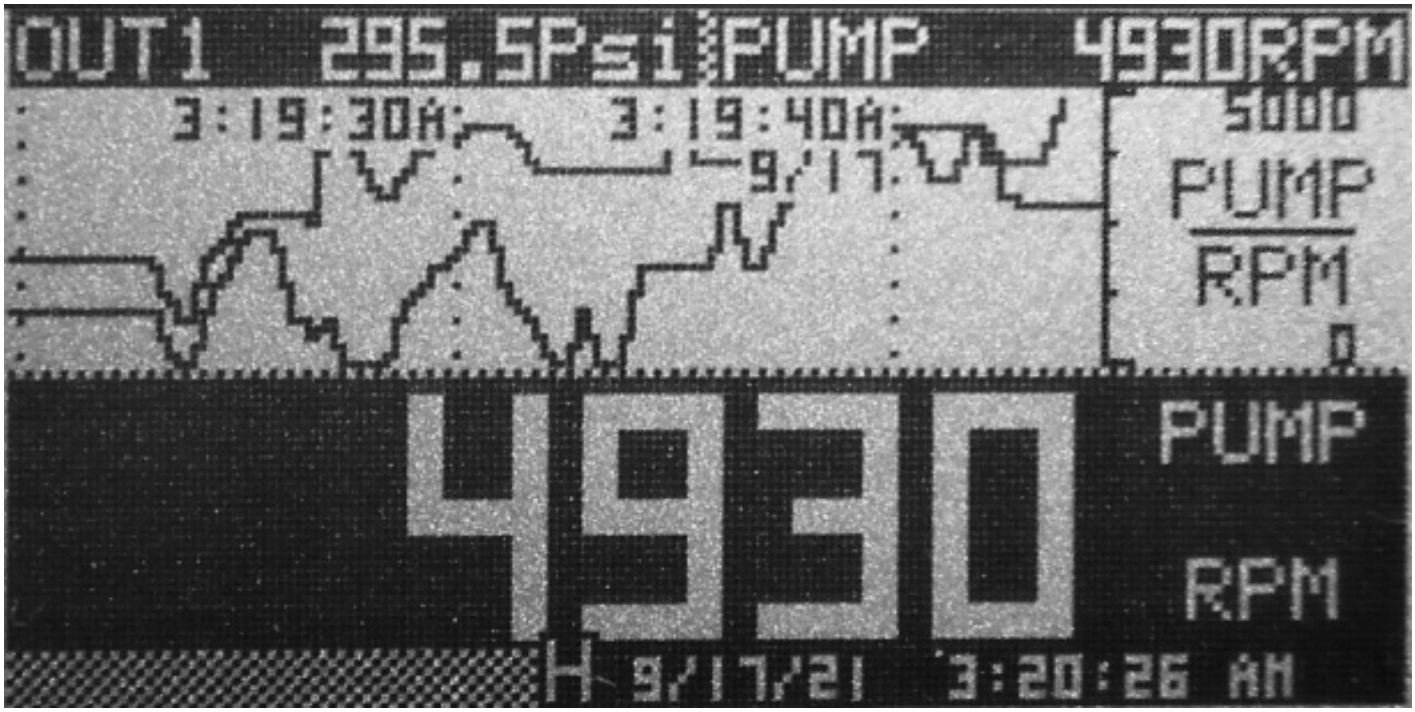

Figure 1.3 Split Screen Graphic Mode

2.0 INSTALLATION AND SETUP

2.1 UNPACKING

2.1.1 Initial Inspection

Exercise care when unpacking the instrument from the shipping carton. The instrument is packed in a custom cardboard box to prevent damage during normal transit. If damage to the shipping carton is evident, ask the carrier's representative to be present when the instrument is unpacked.

2.1.2 Unpacking Procedure

To unpack your Recorder, first remove the cardboard retainer and instrument from the shipping carton. Check the box for the following contents - The Recorder, two locking bars, two 6-32 x ½" screws, AC power supply wall unit (unless the unit is the isolated DC model) and this manual.

2.1.3 Detected Damage

Remove the instrument from the plastic bag and check for damage if any. Also check that the unit is as ordered. If damage is detected after unpacking the instrument, immediately report any damage to the shipping agent and repack the instrument for return to the factory as described in the following section.

2.1.4 Equipment Return

Before returning a damaged or malfunctioning instrument to the factory for repair, contact the sales organization from which you purchased the instrument. A Return Merchandise Authorization (RMA) number must be obtained from the factory before returning an instrument for any reason.

2.1.5 Storage

For prolonged storage before installation, re-pack the Recorder in the shipping container and store in a cool, dry area. We do not recommend storage of the Recorder for more than one year. If longer storage time is required, contact the factory for additional storage information.

2.2 INSTALLATION

The instrument is intended to operate in the following environment:

Indoor Use Only

Installation Category II per IEC 664

Pollution Degree Level II per IEC61010-1

Temperature: -10 °C to 50 °C operating per IEC61010-1

Humidity: Maximum relative humidity 80% for temperatures up to 31 °C decreasing linearly to 50% relative humidity at 40 °C

Recorder Power: 9.0 ±0.5 V dc @ 5 VA (unless indicated otherwise on the unit)

AC Power Requirement (External adapter): 100 - 240 V ac ~ 50/60 Hz

NOTE: The recorder is designed to be panel mounted and as such should be considered as permanently connected. Disconnection from the supply must be possible via a customer supplied switch or circuit breaker. This disconnection device must be included in the panel installation and should be clearly marked, it must be in close proximity to the Recorder and easily accessible to the operator.

NOTE: In order to fully comply with the CE EMC Directive 89/336/EEC, connections to the recorder should not exceed 3 m [9.8 ft.] without adding additional filtering.

The Recorder fits in a standard ¼ DIN panel cutout of 92 x 92 mm [3.62 x 3.62 in.] and requires 140 mm [7.5 inches] panel depth not including space for power and input source cable. The thickness of the panel is immaterial, but panels thicker than .125 inch will require that the locking bars be cut down. Actual dimensions are shown in Figure 2.1.

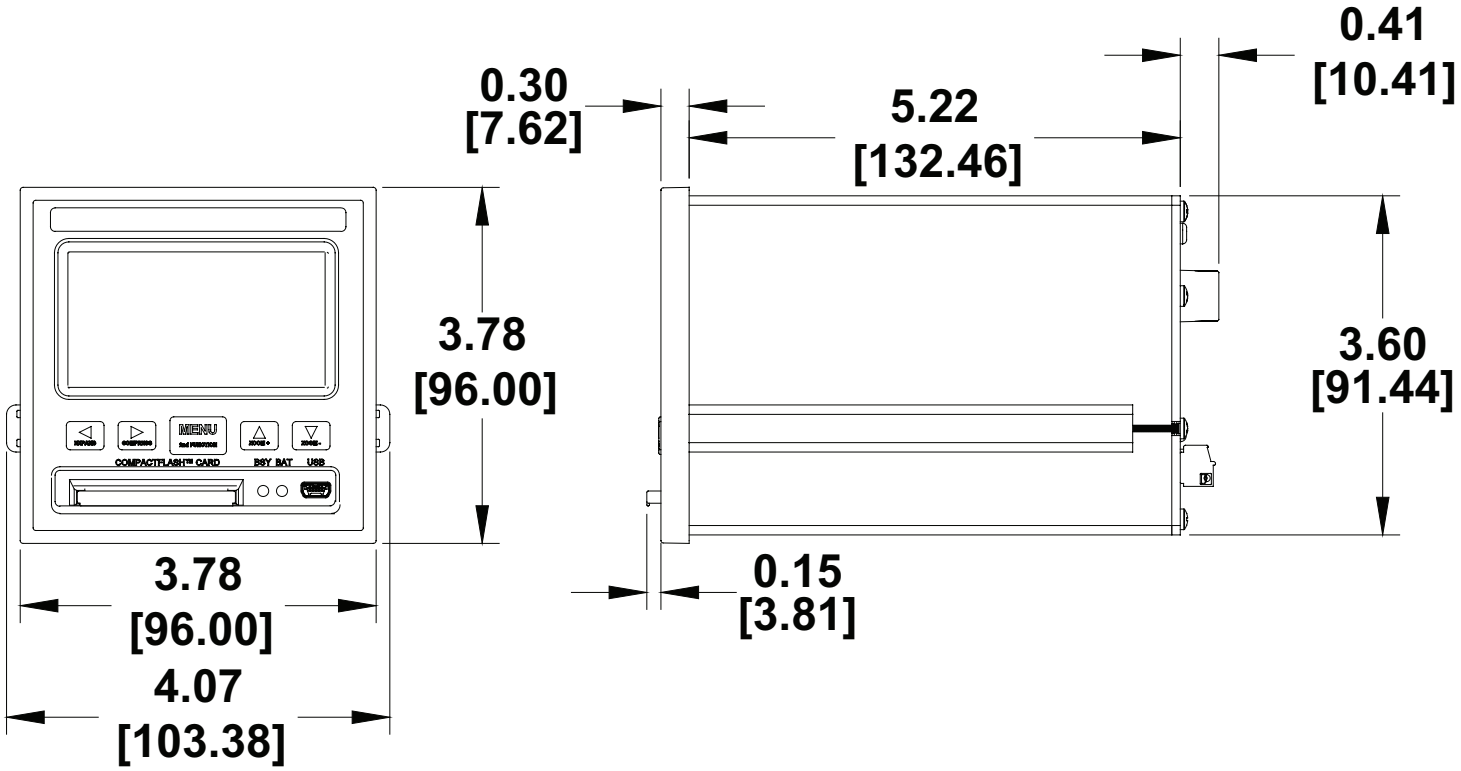

Figure 2.1 Recorder Dimensions

CAUTION: Do not use this instrument in any manner inconsistent with these operating instructions or under any conditions that exceed the environmental specifications stated.

2.2.1 Panel Mounting

The Recorder should be mounted in a vertical panel to ensure proper operation. Ensure you have the proper clearances and proceed as follows:

2.2.1.1 Cut a panel opening 92 mm x 92 mm [3.62 x 3.62 in.].

2.2.1.2 Remove any packaging material from the Recorder. Always handle the unit carefully to avoid damaging the LCD or scratching the display surface.

2.2.1.3 Remove the locking bars from the Recorder enclosure by removing the captivating screws.

2.2.1.4 Insert the Recorder, **rear end first**, through to front of the panel opening.

2.2.1.5 With the Recorder held firmly in place against the panel, install one of the locking bar assemblies from the rear, by sliding the locking bar tongue into the groove on the side of the Recorder enclosure as shown in Figure 2.2.

2.2.1.6 Insert the retaining screw into the rear of the groove. Using a Phillips screwdriver, tighten the screw until the locking bar is just pressing against the panel.

2.2.1.7 Install the other locking bar assembly into the groove on the opposite side of the Recorder enclosure and tighten as before.

2.2.1.8 Using the screwdriver, tighten both screws so that the Recorder is held firmly in place. Do not over tighten to avoid stripping the threads.

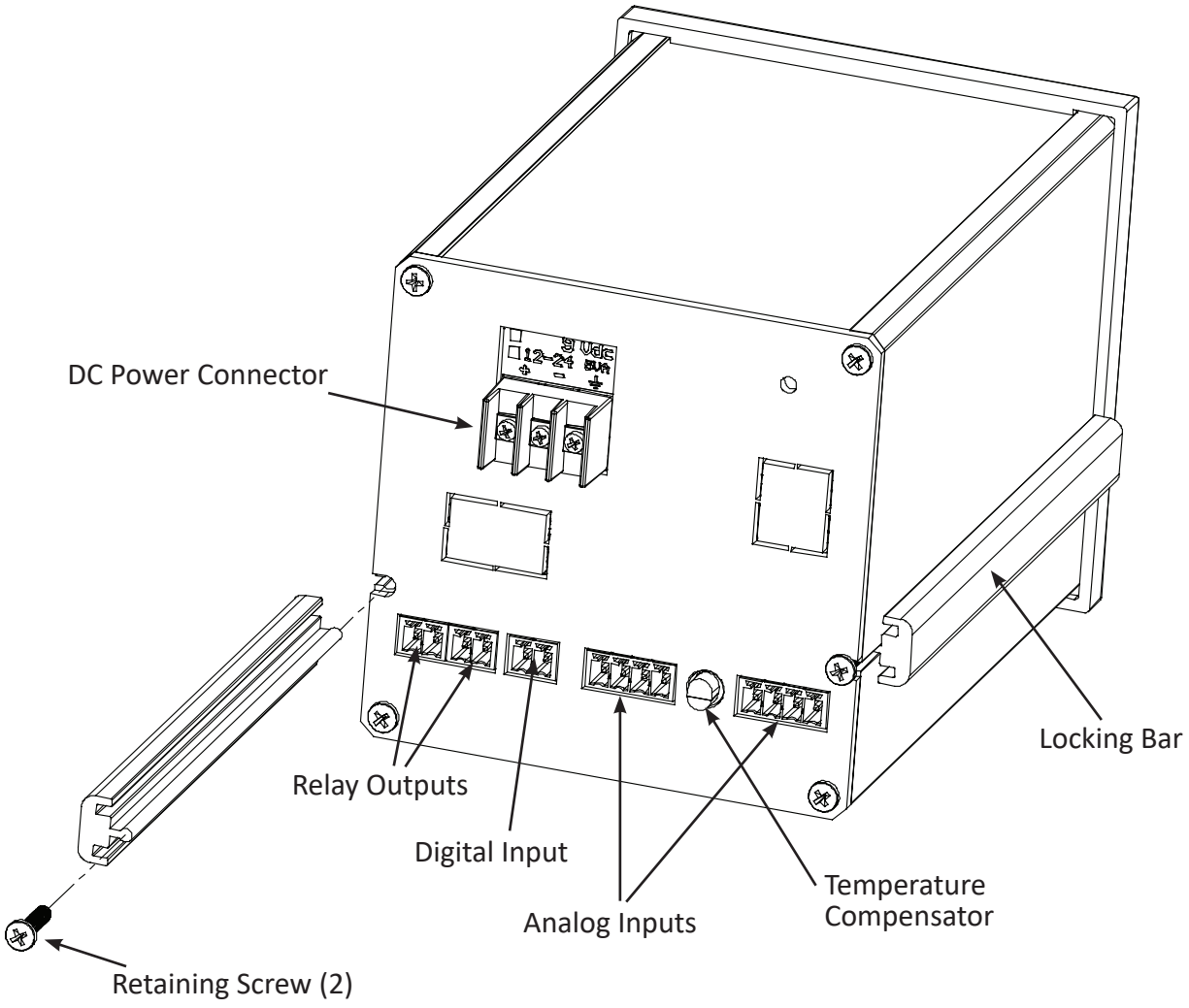

Figure 2.2 Rear View — Installation

2.3 CONNECTION

2.3.1 Power Connections

WARNING: The Recorder is designed to be panel mounted and power should be considered to be permanently connected. Disconnection from the supply must be possible via a customer supplied switch or circuit breaker. This disconnection device must be included in the panel installation and should be clearly marked, in close proximity to the Recorder and easily accessible to the operator.

THE RECORDER IS DESIGNED TO OPERATE ON 9 V dc. DO NOT CONNECT AC POWER DIRECTLY TO THE UNIT AT ANY TIME.

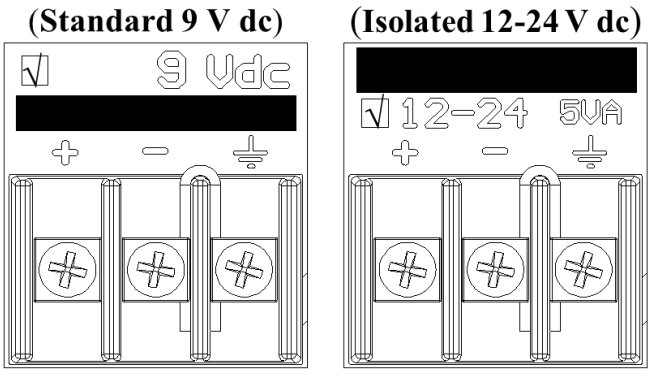

Figure 2.3

The power connector is located on the rear panel in the top left corner. There are two voltage options available for the recorder – the standard is 9 V dc, which is used with an external universal AC Mains power supply. The external wall power supply is a high efficiency switcher that will work from 100 to 240 Volts AC 50/60 Hz. The other power option is an isolated 12 to 24 V dc input for use with an external DC power supply. The power supply option is marked with a check mark in the square next to the installed power supply option and the other option will be blacked out as shown in Figure 2.3.

Check the unit to ensure that the power and inputs are as expected.

Before connecting any power or inputs to the unit, ensure that all signal wires and power cables are at zero voltage. The DC power is applied to the unit via a three-way screw terminal connector. The power supply is supplied with two tinned leads; the positive lead is identified by the RED shroud over the wire. The third connection is for system GROUND. You will require a small flat-head screwdriver. Connect the power and signal wires accordingly, noting carefully all polarities. ***Ensure that the unit is properly grounded*** to a suitable ground within the cabinet.

Loosen the screws on the terminal block and insert the exposed conductor cable from the power supply below the screws, under the metal plate. Ensure that the insulation is flush with the terminal block. If it is too long, remove the cable, trim and reinsert. Tighten the screw to firmly hold the cable. Ensure the ground wire is connected and properly grounded at the other end. If you are not using the supplied wall power supply, follow the same procedure carefully identifying the positive supply line. The unit is protected against reverse polarity but not against substantial over voltage.

2.3.2 Input Signal Connections

The maximum input on any input channel is 25 Volts DC. Voltages higher than this may permanently damage the unit.

Ensure the unit is powered down before connecting any inputs.

There are two universal analog inputs – Channel A and Channel B. Each is programmed independently of the other. Inputs can be voltage or current (50 mA max using an external shunt), thermocouples, RTDs or TTL compatible pulse inputs. Isolation is provided between inputs and the rest of the system. The channels are not isolated from each other. Connection detail for the various inputs is shown in Figure 2.4.

When connecting the signal wires, keep polarities correct. The screw terminals are marked on the rear panel - there are four connections per channel. The high or positive signal marked **IN+**, and a low or common signal marked **IN-**. The terminal marked **Vo** is the Auxiliary voltage output used to drive external sensors at +**5 V dc** and a **maximum of 50 mA**. The terminal marked **I+** is the 1 mA current required for RTDs or resistors. Any screen or shield (often the braided wire) should connect directly to the system ground and is used to shield the low-level input signals from induced noise pick up.

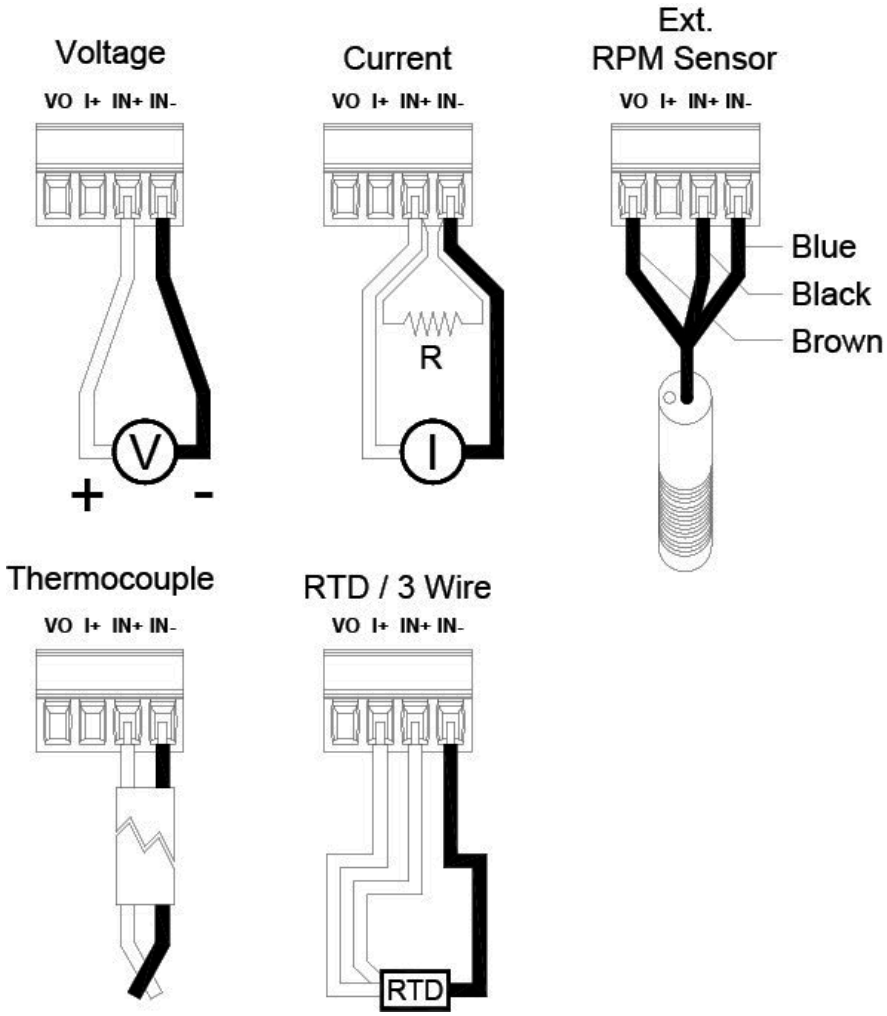

Figure 2.4 Connection Detail

Connect the signal wires to the terminal block in the manner described above. Use wire of adequate gauge to carry the signal. The mA input requires the use of an external 250 ohm shunt. (Check with supplier.) Thermocouples should be connected with thermocouple wire of the same type as the input; the terminal block is the reference junction. Connect any sheath or braid to the GROUND connection. RTDs have an additional wire, the current source, which is connected to the terminal marked I+. See Figure 2.4.

CAUTION: Unused inputs must have IN+ and IN- commoned together.

CAUTION: Never run signal and power or control wiring together in the same conduit. This practice will prevent possible recording error due to induced signals between lines. Route signal wires away from power wires at the rear panel.

NOTE: Ground cable shields at one end only to eliminate the possibility of interference due to ground loop currents. When grounded transducers are used, the shield should be grounded at the sensor end only.

2.3.3 Relay Output Connections

WARNING: To prevent the possibility of electrical shock, use extreme caution when wiring contact output connections. Hazardous potentials may exist on contact output terminals that are floating with respect to instrument ground. **WIRES FROM REMOTE SOURCES MAY CONTAIN DANGEROUS POTENTIALS. ENSURE ALL POWER SOURCES ARE DISCONNECTED BEFORE WIRING RELAY CONTACTS.**

The relay contacts are rated for AC or DC operation **(Maximum recommended voltage - 30 Volts.)** Each relay has a set of potential free contacts. There is no polarity to the terminals; it is a normally open contact that closes in alarm condition. These contacts are internally suppressed for EMI/RFI and High Voltage transients resulting from inductive loads. The relays may be programmed as fail safe, which means they are energized in the "off" condition. This way if the power should fail the relays will open into the alarm condition. See Note in section 2.3.4.

2.3.4 Digital Input

The digital input is optically isolated and is activated by an external dc supply of 5 to 12 V dc at 20 mA. The input is via the DIGITAL INPUT + and – terminals. The – connection is the COMMON for the external input, while the + is the input for the positive voltage.

The digital input may be used as an External Trigger to stop or start recording,

or may be used to change the sampling speed. Thus the unit can be set to record only when a conveyor is running for example. The External Trigger may also be linked internally to the optional Relay Output. This could be used as a remote “record active” indicator. Refer to Sections on Relay setup and External Input setup.

NOTE: In order to fully comply with the CE EMC Directive 2004/108/EC cables to the relay output and digital input should be looped through a ferrite (Type Steward 28R2025-0R0 or similar) close to the terminals.

2.3.5 USB Port (Option)

The USB Port is an option and will be installed only if specifically ordered. It is a serial connection to a PC that allows the user to program the recorder remotely, start or stop recording and download real time data.

2.3.6 ETHERNET Port (Option)

The Ethernet Port is an option and will be installed only if specifically ordered. It allows the user to program the recorder remotely, start or stop recording and download real time data. The IP address is set in the COMMS section in the Advanced SETUP Menu.

Refer to section 5.2 ETHERNET OPTION for detailed instructions on the Ethernet interface option.

2.3.7 Isolated DC input (Option)

The unit may be powered by an external DC source with the isolated DC to DC option. Connect the unit to the external DC source and observe the voltage and polarity of the inputs. In order to fully comply with the CE EMC Directive 89/336/EEC the power cable should be looped through the ferrite bead provided, close to the terminals.

2.3.8 Cleaning

The unit may be cleaned by wiping with a soft cloth. The front panel and display/keypad may be wiped with a slightly damp soft cloth containing soapy solution or a mild detergent. **Do not use any lemon based (citric acid) product to clean the display/keypad. NOTE: THE UNIT IS NOT WATERTIGHT.**

2.4 INPUT SCALING

The input to the recorder is often a standard process variable (e.g. voltage) rather than the actual units being measured (e.g. pressure).

There are a number of custom conversions available in the unit to take care of special inputs such as thermocouples and RTDs, which need special scaling and linearization. These are preset in the unit and require no modification. There is also the capability to customize any input variable that has a linear relationship to the measured variable. The relationship between the required variable and the input variable must satisfy the equation for a straight line:

$$y = mx + b$$

where ***y*** is the output value to be displayed and recorded, ***x*** is the input variable (typically volts or milliamps DC), ***m*** is the scale factor (slope of the line) which defines the relationship between the input and the displayed variable and is a constant (linear relationship), and the factor ***b*** (known as the y intercept) is a constant offset variable that may be positive or negative.

This facility to scale the input is found in the Advanced SETUP Menu and is available to each channel independently. Here the user can easily scale the input and set the displayed units using three alphanumeric characters.

The scaling is achieved in the unit in the CHANnel X SETUP option (X = A or B) in the ADVanced SETUP menu. First set the displayed LO SCALE, which may be positive, negative or zero. Then set the displayed HI SCALE for the full-scale input. The unit will then automatically compute the scale factor and offset.

Setting the engineering units is done in the same menu location using the CHAN UNITS option to set the three alphanumeric characters.

Let us assume we have an input from a pressure transducer of 1 to 5 Volts DC, corresponding to real world units of zero to 250 PSI (Pounds per Square Inch of pressure). Assume we choose the 0 to 5 Volt input. The actual output span of the transducer is 4 volts, with 1 volt = 0 PSI and 5 volts = 250 PSI. This is equivalent to 62.5 PSI per volt. The LO SCALE which is the "0" volt value is equivalent to -62.5 PSI and should be set to this value, and the HI SCALE is set to "250". The engineering units are set to "PSI". The display will now show zero to 250 PSI for 1 to 5 Volts input. The linear scaling is shown in Figure 2.5.

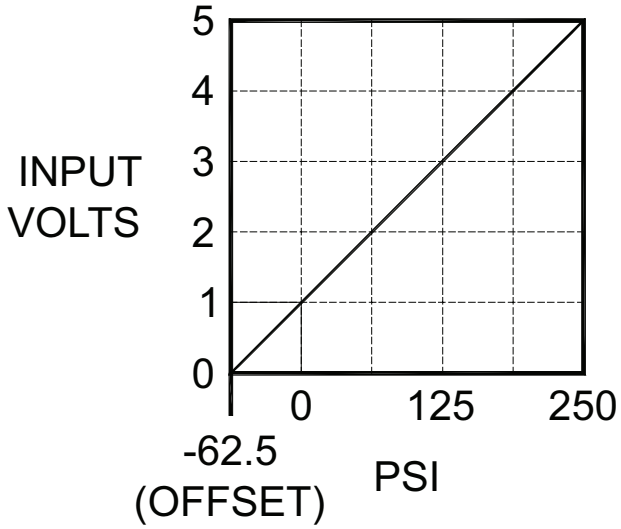

Figure 2.5 Linear Scaling

2.5 ALARMS

The Recorder has four programmable internal alarms with dual relay output. The alarms can be associated with either analog input channel, can be set as high or low, latching or non-latching with or without lockout capability. Each relay has a set of potential free normally open contacts (Form A - SPNO) that are accessible from the rear panel via screw terminal connections. Alternatively the relays can be set to the failsafe mode, normally closed (Form B – SPNC). The relays can be assigned to any, all or none of the alarms. Refer to section on Alarms and Relays in Advanced Setup Menu.

2.5.1 Alarm Types

A **high** alarm is active when the input is greater than the setpoint. A **low** alarm is active when the input is less than the setpoint. A **latching** alarm will remain set once activated and must be reset by the operator. Note that the alarm condition should be removed before resetting the alarm or the alarm will activate and latch again. A **non-latching** alarm will set on alarm condition and automatically reset once the alarm condition is removed. A differential, known as hysteresis or **deadband** can be introduced so that once an alarm is set (at the setpoint), the input must go beyond the deadband before the alarm resets. This prevents the output relays from chattering in borderline conditions. The **deadband** is set in absolute units and adds to the setpoint in a low alarm or subtracts from the setpoint in a high alarm. By way of example,

if the setpoint is 100, the hysteresis (deadband) is set to 5, and the alarm is a high type and non latching, then the alarm will activate when the input exceeds 100 and will remain active until the input drops below 95 (100 minus 5). Alternatively, the user can set a **reset delay** from 1 to 255 seconds. This delay must time out once an alarm condition has been removed before the alarm will reset to normal.

Lockout prevents an alarm from activating until the setpoint has been traversed in the opposite sense by the input. For example, if we were measuring pressure and had a low alarm set at 100, we may not wish the alarm to be active on start up when the pressure may be low or zero. We really wish to monitor a low-pressure situation once our target pressure has been reached, say 150. The lockout prevents the alarm activating at startup. The alarm remains deactivated until the input exceeds the setpoint. Now the alarm arms and any future time that the input drops below the setpoint, the alarm will activate.

2.5.2 Setting Alarms

Setting and configuration is done in the Advanced SETUP Menu - Alarms.

The alarm setpoints are set in the same units as the input type and may be different for each channel. When setting the actual setpoint value, the value may be incremented in steps other than what is expected (unit steps). This is due to the fact that the input is converted into a digital value with a finite resolution. It is not possible to set a setpoint value that cannot be resolved by the internal microprocessor. Select the closest value to the exact value you require; it will always be with 0.5%. The same applies when setting the deadband.

Note that when configuring the alarms, there is no correlation between inputs, alarms and relay outputs. These are user defined. Each alarm can be assigned to only one input channel.

When setting up each alarm channel, the user should DISABLE the alarm so that parameters may be changed WITHOUT AFFECTING THE RELAYS. This is done in the ALARMS menu by selecting the ENABLE option so that no ✓ appears to the left of this option. Once everything is set, select ENABLE once more to activate the alarm, indicated by the presence of the ✓. (Refer to section on Setting Alarms.)

When setting up alarms, you may get unexpected results from the relays if they are enabled. Ensure there is nothing connected to the relays that could result in an accident due to random closing of the relays during setup and always DISABLE the alarm as described above. Make the changes and then re-enable the alarm.

There are many ways the alarms can be set up. All the alarms can be assigned to a single channel and may be of the same type giving for example a various degrees of high warning and ultimately a high shutdown indication. Also, the relays may be assigned to any combination of alarms. This would allow a single relay output to indicate any alarm active. The combinations are endless.

2.5.3 Alarm Indication

There are three indications of alarm condition: the relay outputs, visual icons on the display and audible alarm.

When an alarm is armed and functioning, it is indicated by a small 1, 2, 3 or 4 in reverse video on the bottom left hand side of the graphic display. These status indicators remain on as long as the alarm is enabled. If an alarm is triggered (in alarm condition), the status indicator will blink, and the internal beeper will sound. The beeper can be permanently disabled from the Advanced Setup Menu - BEEPER - ALARMS - OFF.

The relays close on an alarm condition, assuming they have been set up correctly. The relays can be set as fail-safe by reversing the logic of the alarms (Advanced Setup Menu - RELAYS - FAILSAFE).

2.6 MEMORY CARDS

The memory cards used are standard CompactFlash® cards. We recommend the use of SanDisk CompactFlash® cards. The largest capacity card that can be accommodated is 2 gigabytes.

The CompactFlash® cards are keyed and can only go into the recorder one way – face up or face down depending on when unit was built. DO NOT FORCE CARD INTO SLOT!

2.6.1 Care of the Data Cards

Do not expose the cards to direct sunlight or extremes of temperature for any length of time. Do not expose to moisture. Do not bend or twist. Avoid high static discharge. When mailing card use a suitable package to avoid postal damage. When transporting, use an anti-static bag or the plastic enclosure in which the card is supplied.

2.6.2 Card Storage Capacity and Data Type

Depending on what else is stored on the card (e.g. configurations files, other data files), data storage capacity can be roughly calculated by the following formulas:

Number of samples is card size divided by 4.4. The time that it will take to fill a card is roughly the number of samples divided by the sample rate. For example, a 32MB card will hold roughly 32,000,000 divided by 4.4 = 7,272,727 samples. At 5 samples per second this is 1,454,545 seconds or 404 hours or approximately 16.8 days.

If you show the Card Status window (MENU - CARD STATUS), it will indicate how much time is left on the card. It also displays the current Filename that is being used for recording.

The files on the card are in DOS standard format and can be managed on any Windows®-based PC with a CompactFlash® reader – internal or external. The content of the files is in proprietary binary format and requires special software to read the data. All units are supplied with Navigator Lite Software, which allows the data to be exported to a CSV (comma-separated values) file.

3.0 BASIC OPERATING INSTRUCTIONS

The Basic mode of operation encompasses those functions that would be done on a routine basis and relate primarily to viewing and reviewing data with some use of the menu system. The advanced mode, while technically still simple to operate, involves setting up the unit and would typically need to be done only once.

3.1 BASIC MODE OF OPERATION

Basic operations are all done using the five buttons on the front panel (shown below) and the first level menu.

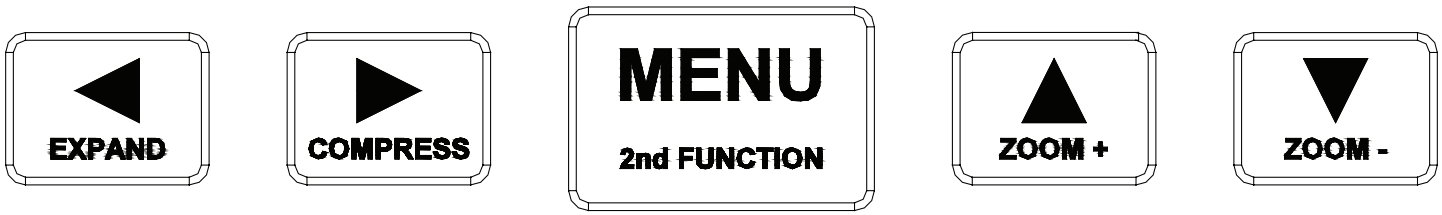

Each arrow button has dual functions. The second function is activated by pressing and holding the **MENU** (2nd Function) button and then pressing any of the other buttons. The 2nd function of each button is denoted by the text under the arrow symbol. (EXPAND, COMPRESS, ZOOM + and ZOOM -).

The unit need not be recording to the memory card in order to manipulate data. The data available however is dependent on how long the unit has been operating, the sample rate and the buffer or memory card size.

3.2 VIEWING HISTORIC DATA

Any data that is not currently visible on the screen is historic data. To view past data, the left (◀) and right (▶) arrow buttons are used to rewind (◀) or fast forward (▶) the data (scrolling). When rewinding, data will be retrieved from the memory card or from the internal buffer and is available as far back as the start of recording. When fast-forwarding, data is available up to real time. The time and date stamp on the screen indicates the relative time of the samples being viewed. Depending on the amount of data to process there may be delays before the screen reacts.

Historic viewing by scrolling is limited to the file (or files) created since recording was manually started via the RECORD MODE Menu - ON. If NOT recording, scrolling back in time is limited to the content of the internal buffer. The history buffered is dependent upon the sampling speed. Data is presented as latest data first.

It is possible to view data from other files of previously recorded data (or even data recorded on another machine) using the View File menu.

At any stage during the rewind or fast forward process, the screen can be restored to current or real time display by pressing the MENU button.

When the data on screen is not current, an H appears on the status line to indicate that the rewind or compress mode is active and the data is on Hold.

3.3 COMPRESSING AND EXPANDING DATA (TREND VIEWING)

In order to view data trends, it is often necessary to pack more data onto the screen than is normally visible in real time. To compress the data, press and hold the **MENU** (2nd Function) key and then press the **COMPRESS** (►) key. Each time this key is pressed the amount of data on the screen will double up to a maximum of 32 times (equivalent to 5 sequential key presses). Once compressed, data can be rewound and fast-forwarded as described in the previous section. The data can be expanded back after being compressed by pressing and holding the **MENU** key and then pressing the **EXPAND** (◄) button.

Note that compression displays peak values (both high and low). Thus even though data is compressed, all amplitude information is present on the display. At compressions of 16 times or greater, the redraw time of data on the screen slows down due to the large amounts of data that must be manipulated.

At any stage during the compression or expansion process, the screen can be restored to current or real time display by pressing the MENU button.

When the data on screen is compressed, a →← appears on the status line to indicate that the compress mode is active.

3.4 ZOOMING DATA (AMPLIFICATION)

As a result of the small display area available, it is not always possible to see small changes in amplitude of the recorded signals even though the resolution of the internal converters can measure it. To overcome this problem you can ZOOM in on a portion of the graph and get increased resolution.

ZOOM applies to each channel independently. The trace that will zoom is the one whose scale is shown to the right. To adjust the other trace, simply wait for its scale to appear.

To ZOOM in and amplify the graph, press and hold the **MENU** key, press the ZOOM+ (▲) button and then release both buttons. The display will zoom in by 2. Note that the scale units change to reflect the increased zoom level. There are three zoom levels available: x1, x2 and x4.

To decrease the zoom level (or zoom out), press and hold the **MENU** key, press the ZOOM- (▼) button and then release both buttons.

While adjusting the zoom, scale flipping is suspended. Turning the other trace off will also suspend flipping.

Note that when zoomed in at any zoom level, the (▲) and (▼) buttons will move the graph relative to the window enabling viewing of any part of the graph within the zoom window.

When zooming, the trace expands or contracts about the centerline. If zooming drives the trace off the screen, it will automatically reposition itself at the top or bottom vertical edge of the chart. Once in a zoom level, all functions are operational on the zoomed display.

When in a zoom mode, the zoom level is indicated in the lower half of the scale for the associated channel (X2, X4 etc.). No indication indicates normal scale (X1).

To exit the zoom mode, zoom out (MENU + ▼) as far as possible until the scale value disappears – x1 mode.

3.5 MENU MODE

At any time when in normal view mode, pressing the **MENU** button will bring up the user menu as shown to the right. Note that the menu "pops up" over the graphics display. The unit continues to record and will not lose data. There is also a time out option that will return a menu display back to a graphic display after a period of inactivity. (Refer to Advanced Setup DISPLAY - MENU TIMEOUT).

```
UNIT TAG
EXIT!
ALARM RESET!
RESET TOTAL..
RECORD MODE..
CURSOR ID!
VIEW FILE..
CARD STATUS
INFO!
SAMPLE RATE..
PASSWORD..
ADV. SETUP..
DISPLAY ADJ..
```

When the menu is active, the Left Arrow (◀) and Right Arrow (▶) buttons act as ESCAPE keys to return to a previous level without activating any function.

The user moves about the menu using the Up Arrow (▲) or Down Arrow (▼) buttons. The current selection is always highlighted in reverse. To select a function, simply move to it with the (▲) or (▼) buttons and then press the **MENU** button once. To go back a level without activating any function, simply press the (◀) or (▶) buttons. Note that the menu has more options than can be displayed at once on the screen. When a selection gets to the top or bottom of the menu list, the list will scroll until the last entry is reached then wrap around. Pressing and holding the (▲) and (▼) buttons will activate an Auto Repeat function and cause the highlight bar to scroll automatically.

The menu has multiple levels. An option with a secondary level is indicated by .. after the name. Access to the various levels can be controlled by a password.

3.5.1 EXIT!

When the menu is displayed, it defaults to the EXIT selection. At this point, pressing the **MENU** button will return to the graphic display.

3.5.2 ALARM RESET!

Pressing the **MENU** button after selecting **ALARM RESET!** will reset any alarm that is active and latched and then exit the Menu Mode. When the alarm is not latched, but is still in alarm, selecting this option will briefly reset the alarm, which will then activate again.

3.5.3 RESET TOTAL

To reset any channel programmed as Totalizer (Refer to XXXX), press the **MENU** button, use the Up Arrow (▲) or Down Arrow (▼) button to highlight **RESET TOTAL** and then press the **MENU** button again (refer to 4.1 CHANNEL SETUP). A sub menu will appear with choices to select **CHAN A**, C**HAN B** and **BOTH**. Use the Up Arrow (▲) or Down Arrow (▼) button to highlight the Channel to reset, or choose **BOTH** to reset both channels synchronously and press the **MENU** button. Press the Left (◄) Arrow button to exit.

3.5.4 RECORD MODE

To begin or end recording on the data card, press the **MENU** button, use the Up Arrow (▲) or Down Arrow (▼) button to highlight **RECORD MODE** and then press the MENU button again. Several options appear in a sub window: **OFF**, **ON** and **TRIGGERED**. To exit at this stage without changing the current setting, press either the Left (◄) or Right (►) Arrow button. Otherwise, use the Up Arrow (▲) or Down Arrow (▼) button to make a selection and then press the **MENU** button. The active selection is indicated by a ✓ to the left of the option. If you are using the alarms or external input to control the recording, select **TRIGGERED** for triggered operation. **OFF** and **ON** will always stop or start a recording irrespective of the state of any of the record triggers. (Refer to EVENT TRIGGERING.)

The RECORD MODE menu option may be password protected.

Before selecting ON or TRIGGERED to begin a recording, ensure that a memory card is in place and that there is sufficient space available to contain your new data. The cards are keyed and can only go into the recorder one way – face up or face down depending on when unit was built. (Refer to CARD STATUS.)

To return to the graphic screen, press either the Left (◄) or Right (►) Arrow button. For further details on other options under RECORD MODE, refer to ADV. SETUP - DATA CARD.

NOTE: While recording, the recorder automatically switches to OFF when a card is removed, or if it is not present when power is applied. This will require a manual restart of the recording when a new card is inserted. If the card remains in the slot while power is removed, the recorder restores the recording state it was in when the power was interrupted.

3.5.5 CURSOR ID!

The Cursor ID mode enables the user to accurately pinpoint the time and amplitude of any sample in the graphics window. The unit has to be in the full graphic mode for this option to work.

To enable this function, press the **MENU** button, use the Up Arrow (▲) or Down Arrow (▼) button to highlight **CURSOR ID!** and then press the **MENU** button again. The Menu will vanish revealing the Graphics screen and a single data cursor against the right edge of the display area. Note: The Cursor ID mode will not activate if the Trend is compressed. The screen will be in the **HOLD** mode and the data window at the top of the screen and time/date stamp at the lower right will show the values of the samples under the data cursor. The status line will show the highlighted **H** to indicate that the data and timestamp is that of the data under the cursor and not real time data.

Using the Left (◄) or Right (►) buttons the user can move the data cursor to the point of interest. The data window at the bottom of the screen will show the time and date of the sample and the digital readings at the top of the screen - A (and B in dual channel units) show the absolute value. Note that at the extremities of the data, the cursor hits an end point and then the data scrolls beneath it. This method can be used to accurately identify unique points on the graphics display no matter how busy the traces appear.

To return to normal (real-time) mode, press the MENU button. Note that entering the Cursor ID mode does not affect the real time acquisition of data.

3.5.6 VIEW FILE

The user can view data from files other than the one currently being recorded. The View File option allows the user to view previously recorded data on the data card from the very first file through to the current data. The display HAS TO BE IN THE FULL GRAPHIC MODE for this to work.

To view a file on the memory card, press the **MENU** button, use the Up Arrow (▲) or Down Arrow (▼) button to highlight **VIEW FILE** and then press the **MENU** button again. The current filename will be displayed. To view historic data from this file, simply press the **MENU** button. To choose a different

file on the memory card, press the Left Arrow (◀) button twice to display a directory listing of all files on the card. Then use the Up Arrow (▲) or Down Arrow (▼) button to highlight the desired file and press the **MENU** button twice to select it.

When viewing from a file, the status line will show a highlighted **F** to indicate that the data being viewed is from a File on the memory card. All View, Compress and Zoom functions work on the prerecorded file. Use the Left (◀) or Right (▶) buttons to move through the file. Data will be presented as oldest samples first.

To return to the current real time trend, press the **MENU** button. View File will automatically abort if the data card is removed.

3.5.7 CARD STATUS

To display the status of the memory card, press the **MENU** button, use the Up Arrow (▲) or Down Arrow (▼) button to highlight **CARD STATUS** and then press the **MENU** button again. A pop-up window will be displayed showing information about the memory card including the size of the card, the amount of space left as a percentage and the equivalent record time at the current settings.

To remove the Card Status pop-up window, select **CARD STATUS** again.

3.5.8 INFO!

To display the System Information, press the **MENU** button, use the Up Arrow (▲) or Down Arrow (▼) button to highlight **INFO!** and then press the **MENU** button again. This will show the Firmware revision and build as well as the MAC Address of the Ethernet option (if fitted) on the **TREND** screen. If the TREND screen is not displayed, this menu option will have no effect. Press the Up Arrow (▲) to remove the information from the TREND screen or leave it to scroll off the trend screen at the chart speed rate.

3.5.9 SAMPLE RATE

To adjust the sample rate (the rate at which data is recorded and displayed), press the **MENU** button, use the Up Arrow (▲) or Down Arrow (▼) button to highlight **SAMPLE RATE** and then press the **MENU** button again.

The SAMPLE RATE menu option may be password protected.

When entering the **SAMPLE RATE** menu, the rate highlighted is the current sampling rate. To exit at this stage without changing the current setting, press either the Left (◀) or Right (▶) button. In this manner the user can check the current sampling rate at any time without affecting the recording.

To change the sampling rate, use the Up Arrow (▲) or Down Arrow (▼) button to highlight the desired sample rate and then press the **MENU** button. The sample rates vary from a high of 100 S/sec (Samples per second) to the slowest 10 min/S (minutes per sample, sec/S is seconds per sample).

To return to the graphic screen, press either the Left (◀) or Right (▶) button.

3.5.10 PASSWORD (PROTECTION)

To set, reset or change a password, press the **MENU** button, use the Up Arrow (▲) or Down Arrow (▼) button to highlight **PASSWORD** and then press the **MENU** button.

This menu option may be password protected.

Follow the prompts. Enter a 4-digit password using a combination of ◄ ► ▼ ▲ buttons. The key presses are echoed in a pop-up window and roll around, first in first out. Once you have entered your password, press the MENU button.

If you are entering a new password, you will be asked to repeat your password and then press the **MENU** button. At this point the password is entered and the unit is protected.

To clear the password, enter the current password and then simply press the **MENU** button when prompted to enter the new password. A null password is no password at all.

3.5.11 ADV. SETUP (ADVANCED SETUP)

See section 4.0 ADVANCED SETUP.

3.5.12 DISPLAY ADJ (ADJUST)

To adjust the backlight brightness and viewing angle, press the **MENU** button, use the Up Arrow (▲) or Down Arrow (▼) button to highlight **DISPLAY ADJ** and then press the **MENU** button again.

Adjust the Viewing Angle using the ◄ and ► keys and the Backlight Intensity using the ▲ and ▼ keys. Press the **MENU** button to accept the changes and exit.

3.6 EVENT TRIGGERING

The recorder can be triggered by certain events that are generated internally or, optionally, externally, which will enable it to automatically change sampling speed or begin or end a recording session. The trigger can be any alarm or the external input. The user can thus set the unit to record at a slow sample speed until some alarm condition is triggered and then change to a higher sample rate to record the transient. Another example is the use of the external event trigger to start and stop recording allowing the selective recording of specific events.

The event triggering is setup in the Advanced Setup Menu option. The control of recording, stopping and starting is set in the **REC. TRIG**. (Record Trigger) menu option (section 4.9), while the changing of sample speed is controlled via the **SAMPLE TRIG**ger menu option where a second set of sample speeds will be presented for the triggered speed change (section 4.8). This rate may be slower or faster than the regular rate depending on application.

The external event may be used in the same manner as the internal alarms for triggering a change of speed or record status. The external event trigger characteristics are set in the ADV. SETUP - EXT. INPUT menu option.

If the recorder is triggered but not recording, the red LED will blink at a 1 second interval.

3.7 STATUS LINE INDICATORS

The bottom line of the graphics LCD is used to indicate the status of the display and of the recorder itself. These status icons consist of reverse video characters or letters that appear according to operations performed and are intended to prevent data on the display from being misinterpreted and to indicate the status of the alarms.

1 2 3 4 X →← H F

From left to right these icons are as follows:

1 2 3 4 - These icon symbols indicate that the alarms are enabled (1 is Alarm 1 etc.). Any number of them may be present depending on how the alarms have been set up. If an alarm is enabled, a solid block will be present. If the alarm has exceeded the setpoint (i.e., is in an alarm condition), its symbol will be **blinking**.

X - This symbol indicates that the external input is enabled. If the external input is triggered, this symbol will blink.

→← - This symbol indicates the display is in the **COMPRESSED** mode. The amount of compression can be determined from the time date stamps on the display. To exit from the Compressed Mode simply press the **MENU** button.

H - This symbol indicates the display is in the **HOLD** mode. The displayed data is no longer real time and will not be updated. The Hold mode is entered by pressing either the LEFT or RIGHT arrow button, entering the compressed mode, or viewing any internally buffered data.

F - This symbol indicates the data on the display is from a **FILE** on the MEMORY CARD and not current data. To view data from a file, press the **MENU** button, use the Up Arrow (▲) or Down Arrow (▼) button to highlight **VIEW FILE** and then press the **MENU** button again. Note that if currently recording, viewing a file does not disrupt the recording procedure provided that the file you are viewing is on the same memory card as the one you are recording on OR you do not exceed the buffer storage time on the recorder if you are using another memory card.

3.8 ENTERING DATA

When adjusting or entering values you have to use the ▼▲►◄ button keys.

Alphanumeric Values – The ► key moves the cursor to the right to select the character to be edited. It will wrap around from right to left. The ▼▲ change the character as shown in Appendix A. If the ▼▲ keys are held down, the character value will jump in increments. The ◄ key clears the text, lists directory (if applicable), or escapes; and the **MENU** button accepts the data and exits.

Numeric Values – work a little differently, the value increments and decrements according to the Up ▲ or ▼ Down keys. Single presses increment or decrement the value by 1. If the button is pressed and held down, the value will increment or decrement in steps of 10. If the **MENU** button is held down and the ▲ or ▼ button is pressed and held down, the value increments or decrements by 100. The **MENU** button accepts the data and exits and the ◄ key escapes.

3.9 TOP LEVEL MENU OVERVIEW

Top Level	Level 1	Function
EXIT		Exits from Menu
ALARM RESET		Resets any alarms Note: If alarm is still active, it will set again; auto exits menu
RESET TOTAL		Reset Totalizers
	CHAN A	Reset Channel A Totalizer
	CHAN B	Reset Channel B Totalizer
	BOTH	Reset Channel A and B Accumulators
RECORD MODE		Enter Password (if set) then press **MENU**
	OFF	Stop recording
	ON	Start recording
	TRIGGERED	Arm triggered recording: an external event will start and stop recording as programmed
	NAME FILE	Enter the name for recorded files (up to 8 characters); use ▼▲▶ keys to edit; ◀ key to clear, list directory, or escape; once desired filename is displayed, press **MENU** to Save and Exit
	SAVE CONFIG	Save Configuration: Enter Config File Name (up to 8 characters); use ▼▲▶ keys to edit; ◀ key to clear, list directory, or escape; once desired filename is displayed, press **MENU** to Save and Exit
	LOAD CONFIG	Load Configuration: Enter Config File Name (up to 8 characters); use ▼▲▶ keys to edit; ◀ key to clear, list directory, or escape; once desired filename is displayed, press **MENU** to Load Config
CURSOR ID*		Puts chart in HOLD mode and places cursor on screen; use ◀▶keys to move cursor and read trend values at top Press **MENU** key to exit this mode

Top Level	Level 1	Function
VIEW FILE*		Select an existing file on the CARD to browse Enter file name (up to 8 characters) Use ▼▲► keys to specify filename; use ◄ key to clear, list directory, or escape; once desired filename is displayed, press **MENU** to view
CARD STATUS		Popup window shows memory card status includes capacity, % full, time remaining; Select again to remove window
INFO*		Displays firmware revision and MAC address on Trend Window; use ▲ key to return to Trend
SAMPLE RATE		Enter password (if set) then press **MENU**
	100 S/sec to 10 sec/S	Select sample rate from 100 Samples/sec to 10 min/Sample; use ▼▲ keys to navigate, ◄ key to escape without change Use **MENU** key to select and exit
PASSWORD		Enter password using ▼▲◄► then press **MENU**; repeat at prompt, press **MENU** to select and exit
ADV. SETUP		Enter password (if set), then press **MENU** (See Section 4)
DISPLAY ADJ.		Adjust Viewing angle (VIEW) ◄► and Backlight (BKLT) ▲▼; press **MENU** to exit

***NOTE: Only available when display is in TREND mode. See section 4.4 DISPLAY.**

4.0 ADVANCED SETUP

The ADVANCED SETUP menu may be password protected. This menu is used to program the various operating parameters of the recorder. This includes analog inputs, alarms, display settings, the clock and various trigger modes.

All items on this menu have one or more sub-menus. To locate the Advanced Setup menu, press the **MENU** button from any normal view mode. The Advanced Setup menu will not be visible when the menu first appears. Use the Up Arrow (▲) or Down Arrow (▼) buttons to scroll and highlight **ADV. SETUP** and press the **MENU** button. This will bring up the Advanced Setup menu shown on the right. Current settings in sub menus are indicated by a ✓ (check mark) along side the item or by the item being highlighted. See section 3.8 ENTERING DATA for more details.

```
ADV. SETUP..
CHAN A SETUP..
CHAN B SETUP..
ALARMS..
RELAYS..
DISPLAY..
DATA CARD..
CLOCK..
BEEPER..
SAMPLE TRIG..
REC. TRIG..
EXT. INPUT..
ALT. LANG..
UNIT TAG..
COMMS..
```

4.1 CHANNEL SETUP

This menu option enables the user to program the inputs of the recorder. Each channel can be set up as an analog input – volts, currents, thermocouple or RTDs, or as digital inputs from RPM or frequency measurements. There is no need to swap out modules since the inputs are universal. Filtering may be applied to each channel for stability of readings or to catch peak values if the display rate is slower than the sample rate. (The unit always samples at 100 samples per second per channel.) For increased accuracy each range may be calibrated independently. Use the Up Arrow (▲) or Down Arrow (▼) buttons to scroll and highlight **CHAN n SETUP** (n = A or B) and press the **MENU** button. The menu options are shown expanded below.

INPUT TYPE		**Note: Menu will differ depending on Input Type selection.**
VOLTS		
	250 mV to 25.0 V dc	Select full scale input Voltage (Input is for DC Volts)
mA		
	4-20 mA to 0-50 mA	Select full scale input Current (Input is for DC milliamps); External Shunt of 250 ohms is required
THERMOCOUPLE		
	J, K, T, E	Select required thermocouple (T/C) type
RTD		
	Pt 385 or 392	Select required RTD type

INPUT TYPE			Note: Menu will differ depending on Input Type selection.
	FREQUENCY		
		100 Hz to 100 kHz	Select Frequency to full-scale range
	SPEED		
		100 RPM to 600K RPM	Select Speed for full-scale range
	COUNTER		
		RESET TOTAL..	Reset Totalizers on Chan A, Chan B or both
		AUTO RESET	Select whether to reset total on Alarms or External Input
		GATE	Select whether to reset total on Alarms or External Input
		COUNT X 1, X k, X m	Count input pulse and display x1, x1,000 (k) or x 1,000,000 (m)
OFF			Turns Channel OFF (toggles) ✓=OFF
LO SCALE			Default value is low end of range (for Offset); use ▼▲► keys to adjust, use◄ key to escape, use **MENU** key to Save and Exit
HI SCALE			Default value is top end of range (for Full Scale); use ▼▲► keys to adjust, use◄ key to escape, use **MENU** key to Save and Exit
CHAN TAG			Enter a Channel Tag Identifier (up to 5 characters); use ▼▲► keys to edit; use ◄ to clear or escape; use **MENU** key to Save and Exit
CHAN UNITS			Default value is Range value; enter a Channels Units - some ranges have defaults (up to 3 characters); use ▼▲► keys to edit; use ◄ to clear or escape; use **MENU** key to Save and Exit

FILTER **Note: Unit always samples at 100 samples/sec internally.**

NORMAL	No filtering	
AVERAGE	Display shows AVERAGE over last sample interval	
HI PEAK	Display shows HI PEAK (max) values over last sample interval	
LO PEAK	Display shows LO PEAK (min) values over last sample interval	
TOTALIZER		
	RESET TOTAL..	Reset Totalizers on Chan A, Chan B or both
	AUTO RESET	Select whether to reset total on Alarms or External Input
	GATE	Select whether to reset total on Alarms or External Input
	/SEC. X 1k to /DAY X 100	Select Totalizer Rate from per second displayed x 1000 to per Day x 100 (4 -digit display)
FAST FILT	Averages last 10 samples continuously; select Neither, Channel A, Channel B, or Both	

CALIBRATION

CAL ZERO	(*If applicable*) Input zero and adjust ▼▲for zero; **MENU** to accept
CAL SPAN	Input Max Span value and adjust ▼▲ for correct value; **MENU** accepts
CAL NOMIN.	Copies default calibration value
CAL NOMIN. ALL	Master calibration reset; resets all calibration correction values for all input types on both channels

4.2 ALARMS

This option is used to program the alarms. There are four alarms and each is programmed independently. Each alarm may be turned on or off and may be assigned to either channel.

Use the Up Arrow (▲) or Down Arrow (▼) buttons to scroll and highlight **ALARMS..** and press the **MENU** button. The menu options are shown expanded below.

ALARM n (n=1,2,3,4)			
	ENABLE		Turn Alarm 1 on or off - ⍰ ENABLED is on
	HIGH		Select if ALARM is HIGH
		SETPOINT	Set ALARM Trip point: Use ▼▲ keys to adjust, ◀ to escape, **MENU** key to Save and Exit
		DEADBAND	Set ALARM DeadBand point: Use ▼▲ keys to adjust, ◀ to escape, **MENU** key to Save and Exit
		CHAN A	Select CHAN A as source for alarm
		CHAN B	Select CHAN B as source for alarm
	LOW	Same as High	Select if ALARM is LOW
	HOLD OFF		Use ▼▲ keys to enter time in seconds from ALARM till relays pull in; Use ◀ key to escape, **MENU** key to Save and Exit
	RESET DELAY		Use ▼▲ keys to enter time in seconds from RESET till relays drop out; Use ◀ key to escape, **MENU** key to Save and Exit
	LATCHING		Toggle using **MENU** to make alarm latching
	LOCK OUT		
	DEFAULT		

4.3 RELAYS

This option is used to program the physical relay outputs. There are two relays and each is programmed independently. The relays can be assigned to one or more ALARM events or the EXTernal INPUT. Use the Up Arrow (▲) or Down Arrow (▼) buttons to scroll and highlight **RELAYS..** and press the **MENU** button. The menu options are shown below.

RELAY 1		
	OFF	RELAY is OFF
	ALARM 1	RELAY is tied to ALARM 1
	ALARM 2	RELAY is tied to ALARM 2
	ALARM 3	RELAY is tied to ALARM 3
	ALARM 4	RELAY is tied to ALARM 4
	EXT INPUT	RELAY is tied to EXTernal INPUT
RELAY 2		Same as RELAY 1
FAILSAFE		Relays are energized in the non-alarm condition
	NEITHER	Select neither relay as failsafe
	RELAY 1	Select RELAY 1 as failsafe
	RELAY 2	Select RELAY 2 as failsafe
	BOTH	Select both relays as failsafe

4.4 DISPLAY

This option is used to set up the display. The Window Configuration allows the user to choose how to display data - either as a trend or as digital values or as a combination of both. The time stamp that appears on the trend can be customized, the menu can be set to disappear and have the display revert to normal, and the backlight can be set to go off after a period of inactivity. (The backlight will restore on any event.) Use the Up Arrow (▲) or Down Arrow (▼) buttons to scroll and highlight **DISPLAY..** and press the **MENU** button. The menu options are shown below.

WINDOW CONFIG		
	TREND	Set display to full screen TREND (both Channels)
	DUAL DIGITAL	Set display to DUAL DIGITAL readouts
	BOTTOM DIGITAL	Set display to TREND in top half, DIGITAL in lower half (CH B)
	INV DIGITAL	Set DIGITAL display to WHITE characters on DARK background
	ALARM BLINK	DIGITAL value will blink when in alarm
	DIGITAL <-->	SWAP the position of dual digital windows
TIME STAMP		
	NONE	No imprint of TIME or DATE on TREND display
	TIME ONLY	TIME imprints on TREND display
	TIME & DATE	TIME and DATE imprint on TREND display
	TOP	Set location of Time (& Date) imprint to TOP of TREND
	MIDDLE	Set location of Time (& Date) imprint to MIDDLE of TREND
	BOTTOM	Set location of Time (& Date) imprint to BOTTOM of TREND
MENU TIMEOUT		
	NEVER	MENU will never collapse (and revert to display mode)
	5 SEC to 30 minutes	Choose MENU TIMEOUT from 5 seconds to 30 minutes before MENU will revert to normal display

BACKLIGHT			
	LIGHT TIMEOUT		
		NEVER	Backlight will never shut off
		5 SEC to 30 MINUTES	Choose time to backlight shut off from 5 seconds to 30 Minutes after inactivity
	BATTERY OFF	Select to turn backlight off in battery mode to save power (battery is optional)	
PEN TYPE			
	CHAN A -		
		SOLID	Set CHAN A TREND line to solid_____
		DOT	Set TREND line to a series of dots .....
		DASH	Set TREND line to a series of dashes ------
		DOT-DASH	Set TREND line to a series of dots and dashes
	CHAN B -	Set CHAN B TREND lines as above	
DISPLAY ADJ.	Same as Top Level Menu option (see section 3.9 TOP LEVEL MENU OVERVIEW)		

4.5 DATA CARD

This option contains duplicate menu items to those found in the RECORD MODE menu. In addition it enables the user to test the card and format it for use (recommended). Use the Up Arrow (▲) or Down Arrow (▼) buttons to scroll and highlight **DATA CARD..** and press the **MENU** button. The menu options are shown below.

NAME FILE	Enter name for recorded file (up to 8 characters) Use ▼▲▶ keys to edit; use ◀ key to clear, list directory, or escape Once desired filename is displayed, use **MENU** key to Save and Exit
SAVE CONFIG	Save configuration Enter the Config File Name (up to 8 characters) Use ▼▲▶ keys to edit; use ◀ to clear, list directory, or escape Once desired filename is displayed, use **MENU** key to Save and Exit
LOAD CONFIG	Load configuration; unit will show list of files Use ▼▲ keys to select, ◀ key to escape Press **MENU** key to select and load; unit will restart on successful load
TEST CARD	Non-destructive test to check the card
ERASE CARD	Erase file; unit will show list of files on card Use ▼▲ keys to select, ◀ key to escape Press **MENU** to select and erase
FORMAT CARD	Format the card for use; ALL DATA WILL BE DESTROYED

4.6 CLOCK

This option allows the user to set the time and date and determine what is displayed for time on the bottom right of the display. Use the Up Arrow (▲) or Down Arrow (▼) buttons to scroll and highlight **CLOCK..** and press the **MENU** button. The menu options are shown below.

MODES	
TIME OF DAY	Select Time Display as real-time clock
24 HOUR	Select Time Display as 24-hour (checked) or 12-hour AM/PM (not checked)
DST SETUP	Select to set up Daylight Savings Time preference (AUTO or enter START DATE and END DATE)
TIME ZONE..	Allow for international time correction Actual time recorded is GMT (this corrects for local time so data is global)
MM/DD/YY	Select date format as month/day/year
DD/MM/YY	Select date format as day/month/year
SAMPLE TIME	Show time of actual last sample
DEFAULT	Select default setup: time of day, 12-hour format, Auto DST, date format is MM/DD/YY
SET TIME	◀▶ Adjusts hours, ▲▼ adjusts minutes; **MENU** accepts
SET DATE	◀▶ Adjusts month/year, ▲▼ adjusts days; **MENU** accepts

4.7 BEEPER

This option allows the user to have various events sound the beeper, Alarms, message boxes and key presses. The tone of the beeper may also be programmed. Use the Up Arrow (▲) or Down Arrow (▼) buttons to scroll and highlight **BEEPER..** and press the **MENU** button. The menu options are shown below.

ALARMS		
	OFF	BEEP on ALARMS turned off if checked
	ALARM 1	Beep on Alarm 1
	ALARM 2	Beep on Alarm 2
	ALARM 3	Beep on Alarm 3
	ALARM 4	Beep on Alarm 4
	EXT INPUT	Beep on External Input
ALARM TONE		Not selected is a continuous high tone
	TONE A	Select Alarm TONE A – add warbling effect
	TONE B	Select Alarm TONE B – add short silence between tones
	TONE C	Select Alarm TONE C – add longer silence between tones
	TONE D	Select Alarm TONE D – add long silence between tones
MSG BOXES		Beep on Pop-Up MESSAGE BOXES active if checked
BUTTONS		Beep on BUTTON PRESS active if checked

4.8 SAMPLE TRIGGER

This option allows the user to program what will trigger a change of sample rate in the displayed or recorded data. Use the Up Arrow (▲) or Down Arrow (▼) buttons to scroll and highlight **SAMPLE TRIG..** and press the **MENU** button. The menu options are shown below.

*Note that if an event is selected to change the sample rate, when exiting the menu the sample rate menu will be displayed. Use the Up Arrow (▲) or Down Arrow (▼) buttons to scroll and highlight the new sample speed and press the **MENU** button to select and the Left Arrow (◀) button to exit.*

OFF	No Sample Rate change if checked
ALARM 1	Sample Rate change on Alarm 1
ALARM 2	Sample Rate change on Alarm 2
ALARM 3	Sample Rate change on Alarm 3
ALARM 4	Sample Rate change on Alarm 4
EXT INPUT	Sample Rate change on External Input

4.9 RECORD TRIGGER

This option allows the user to choose an event to start the recording. Use the Up Arrow (▲) or Down Arrow (▼) buttons to scroll and highlight **REC. TRIG..** and press the **MENU** button. Select either **OFF**, **ALARM 1** through **4** or **EXT**ernal **INPUT** as the record trigger.

*Note that if an **alarm reset delay** is set (see 4.2 ALARMS), the unit will continue to record for this time period AFTER the alarm has gone away.*

4.10 EXTERNAL INPUT

This option allows the user to program the external digital input. This needs to be programmed before it can be used for event triggering if programmed above. Use the Up Arrow (▲) or Down Arrow (▼) buttons to scroll and highlight **EXT. INPUT..** and press the **MENU** button. The menu options are shown below.

ENABLE	Enable External Input
HIGH	External Sense is HIGH to register (> 5 V)
LOW	External Sense is LOW to register (= 0 V)
HOLD OFF	Time in seconds from EXT Input present till recognized Use ▼▲keys to adjust, ◀ key to escape, **MENU** key to Save and Exit
RESET DELAY	Time in seconds from EXT Input absent till recognized Use ▼▲keys to adjust, ◀ key to escape, **MENU** key to Save and Exit
LATCHING	Once set, will remain set till the RESET option is pressed
LOCK OUT	EXT Input requires a change of state to be recognized For a HIGH condition on startup or reset, if input is high it needs to go low first, then high to be recognized
DEFAULT	Set defaults: Disabled, High Level, all else set to zero

4.11 ALT. LANG

The Recorder supports English as the standard language to annotate the menus and other interactive messages. It also supports an optionally user entered second language. This second language can be entered into a file using a common text editor such as Windows® Notepad. That file is subsequently loaded in from a CF card and becomes available along with the still available original English. See Appendix F for details.

The **ALT**ernate **LANG**uage menu option allows the user to select the Alternate Language. The user can toggle between the languages selecting English or Other Language. Use the Up Arrow (▲) or Down Arrow (▼) buttons to scroll and highlight **ALT. LANG..** and press the **MENU** button. The menu options and functions are shown below.

ENGLISH	Select English as the default language
OTHER LANG.	Select the other language loaded as the default
SAVE LANG.	Save the language file Use ▼▶▶ keys to edit; use ◀ to clear, list directory, or escape; Once desired filename is displayed, use **MENU** key to Save and Exit
LOAD LANG.	Load the language file ave the language file Use ▼▶▶ keys to edit; use ◀ to clear, list directory, or escape; Once desired filename is displayed, use **MENU** key to Load and Exit

4.12 UNIT TAG

The unit tag is used to identify the recorder. It is saved to the data file when recording and can be read back by the analyzing software. It is also displayed on the top of the main menu when the **MENU** button is pressed for the first time. It can be a maximum of 15 characters. Select this option then use the ▼▲► keys to adjust and the ◄ key to escape or the **MENU** key to Save and Exit. See 3.8 ENTERING DATA for more details.

4.13 COMMS

This option allows the user to set the IP Address, Subnet Mask and Default Gateway for the Ethernet Option. See below. Use the ◄ ►keys to select the digit to change (Indicated by [123]) and ▼▲ to change it. Use the **MENU** to accept or to escape. The menu options are shown below.

IP ADDRESS	Set the unit IP address as [123].123.123.123 Use ◄► keys to select number group (in brackets), ▼▲ keys to adjust, **MENU** key to accept; change as required
SUBNET MASK	Set the unit subnet mask as [255].255.255.0 Use ◄► keys to select number group (in brackets), ▼▲ keys to adjust, **MENU** key to accept; change as required
DEF. GATEWAY	Set the unit gateway as [123].123.123.123 Use ◄► keys to select number group (in brackets), ▼▲ keys to adjust, **MENU** key to accept; change as required

5.0 MISCELLANEOUS

5.1 BATTERY BACKUP OPTION

If the recorder contains the Battery Backup Option, there is a toggle switch on the back panel below the terminal block. The switch is marked ON and OFF.

In the OFF position, the battery is disconnected from the load and the recorder is off. The battery charges with the switch OFF when the recorder is plugged into AC power.

In the ON position, with external power applied, the unit runs normally and automatically switches to battery backup in the event of a power failure. The recorder continues to run from the battery until power is restored. If the battery voltage reaches a preset low voltage threshold, the battery is automatically disconnected, and the recorder shuts off. When external power is restored, the unit starts up normally and the batteries begin to recharge. Likewise, the unit can run off internal battery without external power by simply turning the unit ON. The recorder switch should be turned OFF when not in use.

Additionally, there is a procedure to turn the backlight off when the unit is running on battery. See 4.4 DISPLAY. This action extends the battery life and the unit continues to operate normally. The green power LED on the front panel will blink when the recorder is being powered from the battery. Run times vary from 8 to more than 12 hours depending on load conditions. It takes 10 to 14 hours for the battery to fully charge.

5.2 ETHERNET OPTION

Setting the IP Address

The recorder needs to have the IP address set manually by the user. The address should be set so it is compatible with the environment into which it connects.

To set the IP address:

1. Select **MENU**
2. Using the ▲ ▼ buttons select **ADV SETUP** then **COMMS**.
3. Select **IP ADDRESS** then use the ▲ ▼ ► ◄ keys to set an address (► ◄ selects which group of digits to adjust then ▲ ▼ changes the number)
4. To accept the address, press the **MENU** button

The IP address you set depends on how you plan to access the device. If you have a local area network connection, the IP address needs to match the subnet setting on your computer. The address will be in the form 192.168.0.210. Check your computer's IP address then set the recorder address so that the first three sets of numbers match that of your computer. The last digit should be different and should be unique – check with your IT department if you are unsure.

Select **SUBNET MASK** and set it to 255.255.255.0, which is typical, or to whatever your system requires and then press the **MENU** key. Use the ◄ key to exit the menu.

If you plan to access the recorder from outside your local area network, then you need to set the Default Gateway IP address. Again, you can get this information from your own PC settings. The Default Gateway is used by the recorder when an IP packet's destination address belongs to someplace outside the local subnet (thus requiring more than one hop of Ethernet communication). The Default Gateway address is usually an interface belonging to the LAN's border router.

Connect the Ethernet cable to the recorder. There are two LEDs on the connector - one indicates connection, the other indicates activity. To connect the recorder directly to your computer you need to use a crossover cable. You can connect using a hub or a switch using a patch cable.

The connection can be tested by using the DOS Command Box and pinging the units. At the DOS prompt type: Ping 192.168.0.210 (use the IP address you set).

If the connection is good you will see a series of replies from the recorder. If you cannot connect, try pinging the address with the recorder disconnected from the Ethernet. If you get a reply, there is another device with that IP address. Change the IP address on the recorder.

There are two methods of connecting to the recorder over the Ethernet: browser connection and Navigator Software.

Browser Connection

Launch your browser (Internet Explorer preferred – V6 or later).

You need to ENABLE ACTIVE X and JAVASCRIPT. From the browser toolbar, select **TOOLS** then **INTERNET OPTIONS** then **SECURITY**. Select **CUSTOM LEVEL** and choose **MEDIUM LOW** or adjust the settings manually.

Enter the Recorder IP address into your browser and click GO.

You should see a picture of the Recorder and the data should update at a 3 to 5 second update rate depending on Ethernet traffic and recorder chart speed (slower chart speeds will result in faster updates over the Ethernet.) Note that the browser shows the recorder status in real time.

Navigator Software

The Navigator Software enables the user to fully interact with the recorder over the Ethernet. You can alter settings, stop and start recording, download data in real time for plotting or archiving on the PC, and you can download historic data files.

Refer to the Navigator Software manual for additional information.

5.3 CALIBRATION

Before leaving the factory, the recorder is calibrated using NIST traceable sources. The calibration values are stored in nonvolatile memory. The unit is calibrated to meet specification, but the user may wish to recalibrate the unit, or calibrate specific input ranges for increased accuracy.

Calibration is the process of "fine tuning" each input for differences that may arise due to manufacturing processes, gain errors, temperature offsets and other physical parameters. Real analog to digital (A/D) converter values are corrected by first adding an offset correction value, nominally zero, to the reading to correct for offsets from zero, and then multiplying it by a span correction value that's nominally 1 to correct for gain errors.

Calibration setup can be found in the **Channel x Setup** Menu (x = A or B) under the Advanced Setup menu options. Each channel needs to be calibrated independently.

There are four options on the calibration menu:

CAL ZERO	Adjusts the offset correction above or below actual 0 (zero) in steps equal to the resolution of the A/D converter
SPAN	Adjust a span correction value above or below actual 1 in small amounts
CAL NOMIN.	Calibrate Nominal – depending on the input range selected, either resets the correction values to 0 and 1 or copies those values from the range from which it's derived; this usually affects only the input type category selected for the current channel
CAL NOMIN. ALL	Calibrate Nominal All – will reset all correction values for all input types on both channels when selected from any input type and channel, a sort of master reset. This is the default in the event that calibration data is found to be corrupted in the nonvolatile memory.

5.3.1 Basic Calibration

All calibration values are derived from a couple of key calibration points. Thereafter, any fine-tuning done to a specific input on a channel is saved for that channel and input range only. The key calibration constants are for:

Lo Volts Covering the 250 mV, 1.25 V, 2.50 V ranges and should be done on the 250 mV range – each channel

Hi Volts Covering the 5.00 V, 12.5 V, 25.0 V ranges and should be done on the 5.00 V range – each channel

THERMOCOUPLES Derived from the Lo Volts calibration value, require an additional offset to compensate for the ambient temperature sensor (ea. channel)

RTDs Derived from Lo Volts calibration value, require an additional span calibration to correct for the internal current source – each channel

CURRENTS Derived from the Hi Volts calibration value, require an additional span calibration to correct for the external resistor (customer supplied) – each channel

FREQ and SPEED Requires only a time base calibration shared for both channels

In general, to calibrate an analog input, first set the specific channel to an input type in the ADVANCED SETUP MENU - CHANNEL SETUP - INPUT TYPE (see section 4.1 CHANNEL SETUP). Once an input type has been chosen, select CALIBRATION (see section 4.1 CHANNEL SETUP). Do not change the units from the default values set when that range is selected (i.e. leave volts as volts and current as current).

Apply a zero value to the input and using the Up (▲) and Down (▼) arrow buttons adjust the OFFSET until the onscreen indications shows zero.

Apply a high value to the same input and using the Up (▲) and Down (▼) arrow buttons, adjust the SPAN until the onscreen indication agrees with the input.

NOTE: *Use an input value slightly less than the full scale value to prevent an overrange indication.*

Repeat for all input types and channels to be used, if not all of them.

5.3.2 Examples

Volts: Should be done for the Lo Volts (250 mV, 1.25 V, 2.50 V) ranges and Hi Volts (5.00 V, 12.5 V, 25.0 V) ranges using the 250 mV and 5.00 V ranges respectively. For each channel individually, set the input for 250 mV and go to CALIBRATION. Short the input and adjust the OFFSET until 0 is indicated. Then apply a near full scale input (so as to not overrange the input, say 240 mV on the 250 mV range) and adjust the SPAN.

Thermocouples: (preferred method) First calibrate Lo Volts range (250 mV) for the same channel as described above. Then switch to Thermocouple range. Select NOMINAL to copy the volts calibration to thermocouple range. The recorder is now calibrated for ideal sensors. Refine the calibration by either shorting the input (you need to know the ambient temperature) or attaching a thermocouple sensor or calibrator of the correct type for the selected range, and then if necessary, adjust the OFFSET until the correct temperature is displayed – this corrects the ambient temperature sensor. If there's a known "high" temperature source handy use that to fine-tune the SPAN value.

Currents: (preferred method) First calibrate Hi Volts range (5.00 V) for the same channel as described above. Then switch to any CURRENT range. Select NOMINAL to copy the volts calibration to the current range. The recorder is now calibrated for ideal resistor (250 ohm). Refine calibration for resistor and sensor current tolerances by attaching a 250 ohm +0.1% resistor and input sensor matching the selected range. Apply low value inputs to adjust the OFFSET value and high value inputs to adjust the SPAN value.

RTDs: (preferred method) First calibrate Lo Volts range (250 mV) for the same channel as described above. Then switch to RTD range. Select NOMINAL to copy the volts calibration to RTD range. The recorder is now calibrated for ideal sensors and internal current source. Refine the calibration by applying an accurately known resistance for a given temperature (you may need resistance to RTD tables). Adjust the SPAN until the correct temperature is displayed – this corrects for the internal current source.

Frequency (RPM or Hz): Apply a calibrated frequency input near the high end of the selected input range of either channel. Adjust SPAN until the indicated value is correct. There is no applicable OFFSET adjustment to be made.

Recommended procedure for full initial calibration, in this order:

1. Calibrate 250 mV range, both channels using a calibrated source
2. Calibrate 5.00 V range, both channels using a calibrated source
3. Calibrate any T/C range, both channels using the NOMINAL method
4. Calibrate any RTD range, both channels using NOMINAL method
5. Calibrate any current range, both channels using NOMINAL method
6. Calibrate any Tach range, either channel using a calibrated signal source

NOTES:

As with other numeric editing, the rate that a calibration value is adjusted accelerates with the length of time the button is pressed.

Calibrating either channel for tachometry calibrates both channels and does not have to be repeated for each channel as they use the same base counter. Additionally, there's no OFFSET adjustment for these inputs.

Thermocouple and RTD linearization tables are very accurate; usually calibrating the 250 mV range for the same channel and then copying the calibration values using NOMINAL should be enough. Remaining sources of error are the ambient sensor (probably small) for the thermocouple and the current source (small) for the RTD, and the actual sensors themselves. The ambient sensor can be calibrated by adjusting the OFFSET with the thermocouple at some known temperature (such as ice water) or a known room temperature with a wire short on the input. The input sensor span adjustment would need a high temperature point to calibrate.

There can be interaction between the OFFSET and SPAN with the thermocouple input since it can't be easily determined when exactly 0 volts is applied in combination from the ambient and input sensors. This can happen with other input types where the input used for the OFFSET adjustment does not present 0 volts to the input.

Calibration values are copied to an EEPROM (nonvolatile) device when performing the calibration operations. These values are copied from the EEPROM upon every power up of the recorder and tested for corruption. If the values are found in error, then nominal values are inserted in all categories.

6.0 SPECIFICATIONS

Specification*	Recorder
Input Power	**Recorder:** 9 V dc ±0.5 V @ 5 VA (depends on external loads) **External AC Universal Adapter:** 100 – 240 V ac 50/60 Hz **Optional Isolated:** 12-24 V dc input (not compatible with Battery Backup Option)
Battery Option	Internal battery pack provides uninterrupted operation during blackout; 6 V dc 2400 mAH NiMH **Backup Time:** Depends on External load **Without Ethernet:** 6 hours typical **With Ethernet:** 2.5 hours typical
Output	Two (2) outputs 5 V dc @ 50 mA to power external sensors Isolation - 300 V dc/ac to system ground/chassis
No. of Channels	Two (2)
Universal DC Input	**Isolated Input:** 300 V ac/dc to system ground/chassis; inputs share a common ground connection
DC Input	Resolution: 0.025%
Voltage	**Ranges:** 0 to 250 mV; 1.25 V; 2.5 V; 5 V; 2.5 V; 25 V **Accuracy:** 0.1%
Current	**Ranges:** 0 – 20 mA; 4 – 20 mA; 0 – 50 mA; 10 – 50 mA **Accuracy:** 0.1% excluding 250 ohm external shunt (required)
Thermocouple	**Ranges:**
	J -100 to 760 °C ±2 °C (-148 to 1400 °F ±3 °F)
	K[1] -100 to 760 °C ±2 °C (-148 to 1400 °F ±3 °F)
	K[2] 0 to 1370 °C ±2 °C (32 to 2498 °F ±3 °F)
	T -100 to 400 °C ±2 °C (-148 to 750 °F ±3 °F)
	E -80 to 400 °C ±2 °C (-112 to 750 °F ±3 °F)
Accuracy	0.3%. Ambient temp. sensor accuracy ±1.5°

Specification*	Recorder
RTD	2 or 3 wire; **Resolution:** 0.1°C, **Accuracy:** 0.3% **Internal current source:** 1mA 100 ohm Pt 385: -100 to 750 °C (-148 to 1380 °F) 100 ohm Pt 392: -100 to 750 °C (-148 to 1380 °F)
Frequency Input (Hz)/Speed Input (RPM):	
Range	0 – 10,000 Hz or 0 – 600,000 RPM
Accuracy	**Frequency:** <1kHz = 0.1 Hz; ≥1kHz = 2 Hz **RPM:** ≥10k RPM = 1 RPM; 10k<RPM<100k = 10 RPM; ≥100k RPM = 100 RPM
Input	Low: <1.0 V dc High: >3.0 V dc <12 V dc
Pulse Width	10 µsec minimum
Input Impedance	> 100 k
Measurement Rate	Up to 100 samples/sec per channel
Math Function	y = mx + b; average, hi peak, lo peak
Media	CompactFlash® to 2 GB
Display	LCD graphics 160x80 pixels, black FSTN with white LED backlight; user-controlled backlight level and contrast adjust (electronic)
Display Modes	Trending (horizontal), large dual digital readout, mixed mode
User Interface	Five (5) buttons keypad with second function operation
Clock	Internal battery-backed clock with auto leap year and daylight savings
Relay Output	Two (2) alarm outputs - 30 V 0.5 A Form A relays

Specification*	Recorder
Opto-Isolated Input	One input 5 to 12 V dc operation @ 10 mA typical
Audible	Internal buzzer (tones)
Dimensions	Front panel: 96 mm x 96 mm (1/4 DIN) x 152 mm (3.78 in. x 3.78 in. x 6 in.)
Environmental:	
	Indoor Use Only
	Installation Category II per IEC 664
	Pollution Degree Level II per IEC61010-1
	Altitude up to 2,000 m
Temperature	-10 °C to 50 °C operating per IEC61010-1
Humidity	Maximum relative humidity 80% for temperatures up to 31 °C decreasing linearly to 50% relative humidity at 40 °C
Optional Communications:	
USB	Front panel USB 2.0 slave port for data transfer and configuration
Ethernet	10/100 Ethernet

***Specifications are subject to change without notice.**

6.1 COMPLIANCE

CE Compliant

- Low Voltage Directive (LVD) 2014/35/EU
- Electromagnetic Compatibility Directive (EMC) 2014/30/EU
- Restriction of Hazardous Substances (RoHS) Directive 2011/65/EU

UL and cUL (Power Supply)

7.0 ACCESSORIES/REPLACEMENT PARTS AND SENSORS

See Accessories webpage for details.

Accessories/Replacement Parts:

Navigator Software Full PN: 5380-260	Windows® compatible software for graphic analysis, printing, transfer, and export
CFCR PN: 5380-102	CompactFlash® Card Reader, USB 2.0 compatible
MAS25OR Precision Resistor PN: 5380-151	250 ohm precision resistor for current inputs, 0.1%, 0.5 watt
MC2048MBCF Memory Card PN: 4380-166	2 Gigabyte CompactFlash® Card
PSC-2UW PN: 5380-331	Standard AC adapter, 100-240 V ac wall adapter with interchangeable plug set

Sensors:

See Sensors webpage for details.

THP-W Temp/Humidity Probe PN: 5380-505	Temperature/Humidity Probe with detachable 8 ft. [2.5 m] cable with tinned leads
RLS-W PN: 6180-080	Rugged Laser Sensor with removable 3 m cable, M12 connector to tinned leads
ROS-W PN: 6180-056	Remote Optical Sensor with 8 ft. [2.5 m] cable with tinned leads
ROS-P-25 PN: 6180-057-25	Remote Optical Sensor with 25 ft. [7.6 m] cable with 1/8" [3.5 mm] phone plug connector (cut plug off for connection to wire terminals)
ROLS-W PN: 6180-030	Remote Optical Laser Sensor with 8 ft. [2.5 m] cable with tinned leads
MT-190W PN: 6180-037	Magnetic Trigger Sensor/Amplifier with 8 ft. [2.5 m] cable with tinned leads
IRS-W PN: 6180-021	Infrared Sensor with 8 ft. [2.5 m] cable with tinned leads
GE200 HP PN: 6180-014	Electromagnetic Inductive Spark Plug Sensor with 15 ft. cable

APPENDIX A: AVAILABLE TEXT CHARACTERS

The following is a list of characters available any place text can be entered. The character to be changed will be underlined. Typically the list will start with the A character. Regardless of what character you start with, the Up (▲) arrow key will scroll through the list moving in order from left to right, and the Down (▼) arrow key will scroll through the list moving in order from right to left. Use the Right (▶) arrow key to move the cursor to edit another position in the text. The Left (◀) arrow key will clear the text. The shaded characters are NOT legal for filenames..

(space)	!	"	#	$	%	&	‘
(	)	*	+	,	-	.	/
0	1	2	3	4	5	6	7
8	9	:	;	<	=	>	?
@	A	B	C	D	E	F	G
H	I	J	K	L	M	N	O
P	Q	R	S	T	U	V	W
X	Y	Z	[	\	]	^	_
`	a	b	c	d	e	f	g
h	i	j	k	l	m	n	o
p	q	r	s	t	u	v	w
x	y	z	{	|	}	~	#
↑	↓	®	¬	°	µ	Ω	

APPENDIX B: ERROR AND INFORMATION MESSAGES

The following messages appear on the Graphics screen as a result of the following (suggested solutions appear in italics):

ACCESS DENIED An incorrect password was entered while attempting to gain access to a password protected function. *Find someone who has the right password.*

BAD FILENAME The filename entered does not meet the DOS requirement. Use A to Z and 0 to 9 without spaces, 8 characters max. *Reenter the name.*

CARD ABSENT Failed attempt to read from (viewing) or write to (recording) a memory card which is not present. *Insert a card.*

The CompactFlash® cards are keyed and can only go into the recorder one way – face up or face down depending on when unit was built.

DO NOT FORCE CARD INTO SLOT

CARD ACCESS ERROR Failed attempt to read or write a memory card due to file data corruption. *Format and erase card - **DATA WILL BE LOST**.*

CARD FULL Failed attempt to write to a memory card which is filled to capacity. *Exchange card with a new one that has spare capacity.*

Note correct orientation of the CompactFlash® card.

DO NOT FORCE CARD INTO SLOT!

ENTER CURRENT PASSWORD You have attempted to access a password protected function and must enter the password to continue. *Enter current password.*

ENTRIES MISMATCH This time password did not match last time password when setting up. *Try it again, only more slowly.*

ENTRY ERROR An illegal number of keystrokes were entered while entering the password. *Try it again, only more slowly.*

FILE NOT FOUND Failed attempt to read a data file or configuration file due to the fact that no such file exists on the memory card. *Get the correct card or select a different file.*

FORMAT CARD Card is incompatible or unformatted. *Card requires formatting.*

OVERWRITE CONFIG. FILE? A config file already exists on the memory card. Writing to the card will overwrite this existing file. The unit is checking user intent. *Press the UP ARROW key to overwrite the existing file, any other key to exit.*

STOP RECORDING FIRST The function you are trying to perform cannot be done while the unit is in record mode. *Stop recording and try again.*

TEST FAIL The card has errors on it and did not pass the card test. *Try reformatting the card or swap the card.*

Note correct orientation of the CompactFlash® card.

DO NOT FORCE CARD INTO SLOT!

APPENDIX C: MASTER RESET

The master reset is used to restore all factory defaults to the unit. It is used in the unlikely event of the unit losing or corrupting the contents of its nonvolatile memory. All user configurations will be lost.

To reset the unit to the factory defaults, hold the two outer keypad buttons down simultaneously (The DOWN and LEFT arrows) while powering up the unit. **Wait two to three seconds and then release.**

APPENDIX D: REPROGRAMMING FIRMWARE

The operating firmware in the unit is programmed into flash memory and can be updated in the field. It is loaded from the CompactFlash® card. Users can upgrade their firmware by simply downloading the latest firmware from the Company website, saving it onto the CompactFlash® card, inserting the CompactFlash® card into the unit and following the steps below. Before updating firmware, save existing configurations and language files – see below.

The upgrade file is named DC125XXX.hex where XXX reflects the firmware revision number. Once this file is on the CompactFlash® card, insert the card into the unit.

The CompactFlash® cards are keyed and can only go into the recorder one way – face up or face down depending on when unit was built. DO NOT FORCE CARD INTO SLOT!

Turn the unit power off. Press and hold the **MENU** button and Left Arrow (◀) simultaneously and power the unit back on. The POWER LED will come on fully bright; the other will blink as the card is accessed.

If the program is loaded successfully, the two LEDs will alternate. If the load fails, the two LEDs will blink in unison. It takes 10 to 15 seconds to load the program. If the load should fail, try it again. If it still fails, reload the file on the card. Remove the power and reapply it. The screen will show the latest firmware revision and build date.

Should there be any changes in the menuing or other messages as a result of the new firmware, only the still existing message strings will retain the alternate language equivalents. English items removed will automatically omit the alternate language variation. New English items will not already have an alternate language variation and will remain in English when displayed. The user can check for this by reviewing all the menus manually. An easier way is to use SAVE LANG. to make a new file and then visually inspect that for missing items to the right of the asterisks. The missing items can be added or not as the user requires.

APPENDIX E: TOTALIZER/COUNTER FUNCTIONS

To use the **TOTALIZER FUNCTION:**

1. Press **MENU > ADV. SETUP > CHAN A (or B) SETUP > INPUT TYPE** and set the input channel up as described in section 4.1 CHANNEL SETUP.
2. From the **CHAN A (or B) SETUP** menu, use the Up (▲) or Down (▼) arrow keys to select **FILTER..** and press **MENU**
3. Use the Up (▲) or Down (▼) arrow keys to select **TOTALIZER** and press **MENU**
4. Use the Up (▲) or Down (▼) arrow keys to select your range and reset options and press **MENU**

Calculate the highest number your total will be without going overrange and use the lowest possible full-scale range for best resolution. This will provide the best accuracy in your results. The maximum number of counts is 8000 in any X1 range; 800,000 in a Xk range; and 8 million in a Xm range.

It is also helpful to reset the Totalizers as often as possible as any errors are accumulated over time. There is less accumulated error in a month than there would be in a year. There will be less error in a week than in a month, and so on. When you reset the Totalizers, the errors are reset as well.

FOR EXAMPLE: To totalize a rate, such as a 4-20 mA input, set the channel as usual to the desired input type and engineering units. Then go to the **FILTER** section and choose your rate from the list of selections from **/SEC. X 1k to /DAY X 100** as described above.

To use the **COUNTER FUNCTION:**

1. Press **MENU > ADV. SETUP > CHAN A (or B) SETUP > INPUT TYPE > COUNTER**.
2. From the **COUNTER** menu, select your reset and gating options as well as your full-scale range

The counter function can be used to totalize pulses accurately from flow meters. This can provide more accurate totals than using the totalizer function on a sensor that provides a rate.

APPENDIX F: ALTERNATE LANGUAGES

The following procedures describe how to enter and activate a second language.

If necessary, insert a CompactFlash® card into the memory card drive slot. Note that the cards are keyed and can only go into the recorder one way – face up or face down depending on when unit was built.

To obtain a copy of the language file for use as an initial template for another language, or to update a preexisting alternate language file:

1. Press **MENU > ADV. SETUP > ALT. LANG.. > SAVE LANG.**
2. You will then be prompted to select a filename. Use the standard editing or directory selection methods to name the file and press **MENU**
3. Wait for the transient message **DONE** to appear. The file is now available on the CompactFlash® card to be transferred to a PC.

Use Windows® Notepad, or other simple text editor, to open the file for editing. The full name of the language file is the name entered in the recorder with .LAN as the suffix. The contents of the file will appear in the following format:

```
EXIT!            *ENTER
ALARM RESET!     *FALSE ALARM
RESET TOTAL..    *RESET ALL
RECORD MODE..    *
CURSOR ID!       *
VIEW FILE..      *
```

All of the modifiable message strings will appear in the file. The general format of each string is:

STRING tab tab asterisk newline

If there are already any alternate language strings present in the recorder, they will appear farther to the right on the line after the asterisk on the same line as the English language phrase it's associated with. The user will optionally enter more or modify existing text to the right of the asterisk. The asterisk must remain present along with all of the text and tab characters to the left of that asterisk for the new text to be registered properly with the recorder.

Once all desired changes have been made, the newly edited .LAN file must be loaded into the recorder and set:

1. Press **MENU > ADV. SETUP > ALT. LANG.. > LOAD LANG.**
2. You will then be prompted to specify the filename. Use the standard editing or directory selection methods to select the file and press **MENU**
3. This causes the alternate language to be loaded into the recorder and saved in the Flash memory. Wait for the transient message **DONE** to appear. This process may take up to a minute to complete. Occasional blinking of the Red LED will signify accesses to the card as it proceeds.
4. And finally, select **OTHER LANG.** in the **ALT. LANG..** menu to have the alternate language text appear onscreen. This selection will normally be remembered through power interruptions; however, the user can change the selection back and forth at any time.

NOTES:
The language currently selected for use does not affect what is written to the file; however, the words in the menu mentioned above may appear onscreen as the alternate language equivalents.

There are no restrictions on actual case and how the style of the strings can vary, but the menu strings must be **14 characters** or less. Others must fit the screen using a single line of text. Leading spaces in the user entered text will appear in the messages and will waste space, so they should be avoided.

Note that depending on the editor being used and the length of the English text, the asterisk may appear to fall in different positions from line to line. Resist the temptation to line them up to avoid damaging the text to the left of that asterisk.

The user does not have to enter an alternate phrase for every line in the file. The English version will automatically be substituted for those omitted. In fact, an alternate English language file could be substituted by only changing a few of the lines to suit a user's preferences.

It is recommended to keep backup copies of language (.LAN) files.

Multiple alternate language files can be created and saved in additional .LAN files for use one at a time.

Measure • Monitor • Maintain

Monarch Instrument is committed to excellence and quality in manufacturing, sales, and service.

Portable Tachometers

Track-It™ Data Loggers

Panel Tachometers

Fixed Mounted Strobes

Portable Strobes

Frequency Converters

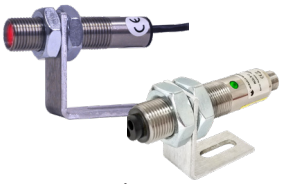

Speed Sensors

DataChart™ Paperless Recorders

MONARCH INSTRUMENT

© Copyright 2006-2024 Monarch Instrument All rights reserved

1.888.610.7664 www.calcert.com sales@calcert.com