HIOKI

CT6873 / CT6873-01

AC/DC CURRENT SENSOR

Maximum rating 200 A, high-stability, high-accuracy, wideband DC to 10 MHz, high-CMRR, high-performance fluxgate technology, pass-through type

3 year Warranty

Features

- 2 ppm linearity
- 5 ppm offset
- Voltage output
- CT coil structure for broadband and superior frequency characteristics
- Built-in in plated shield for excellent noise resistance (high CMRR)
- Aperture ϕ24mm for cables and bus-bars
- The Power Analyzer PW8001 or the Data Logger LR8101, LR8102 with the Power Measurement Module M7103 automatically recognizes the current sensor's information (phase shift data, sensor model name, rated current, serial number) when connected.

Applications

- Automotive (e.g. xEV R&D and manufacturing)
- Renewable energy (power conditioner R&D and manufacturing)
- Efficiency measurement of high-efficiency energy converters
- Analysis of industrial inverter motors
- Calibration of shunt resistors
- Measurement of minute superimposed current in battery systems
- Industrial drones
- For feedback control in medical devices (MRI,CT, X-ray)

Specification highlights	Symbol	Unit	Min.	Typ.	Max.
Nominal primary DC current	I_{PN} DC	A	-200		200
Nominal primary AC current	I_{PN} AC	Arms			200
Measurement range	I_{PM}	A	-220		220
Nominal output voltage	V_{out}	V	-2		2
Primary / secondary ratio	Ratio	V/A	0.01	0.01	0.01
Linearity error	ε_L	ppm		±2	
Offset error	ε_O	ppm		±5	
DC amplitude error	ε_G	ppm		±7	
Bandwidth (±3dB)	f	MHz		10	
Withstand voltage (1mA, 50 / 60Hz for 1minute)	U_d	kV			7.4
Power supply voltages	U_c	V	±11.5		±15
Operating temperature range	T_A	ºC	-40		85
Output cable length	L_{cable}	m		CT6873 : 3m CT6873-01: 10m	

HIOKI E.E. CORPORATION

All information correct as of November 10, 2025.
Company names and product names appearing in this catalog are trademarks or registered trademarks of various companies.
All specifications are subject to change without notice.

1.888.610.7664 www.calcert.com sales@calcert.com

AC/DC CURRENT SENSOR

Electrical specifications at T_A = 23°C ±5°C, supply voltage (by using external PSU) = ±12V unless otherwise stated

Parameter	Symbol	Unit	Min.	Typ.	Max.	Comment
Nominal primary DC current	I_{PN} DC	A	-200		200	Refer to “Figure 1. Frequency derating”
Nominal primary AC current	I_{PN} AC	Arms			200	Refer to “Figure 1. Frequency derating”
Measurement range	I_{PM}	A	-220		220	Refer to “Figure 1. Frequency derating”
Maximum input current	I_{MAX}	Apeak	-420		420	Not exceeding derating curve shown in Figure 1 However, it is allowable for up to 20 ms at 40ºC or less
Nominal output voltage	V_{out}	V	-2		2	
Primary/secondary ratio	Ratio	V/A	0.01	0.01	0.01	
Bandwidth (-3dB)	f	MHz		10		Refer to “Figure 2. Frequency characteristics”
Output resistance		Ω	40	50	60	
Linearity error	ε_L	ppm		±2		Refer to “Figure 3. Linearity error characteristics”
Offset error	ε_O	ppm		±5		
DC amplitude error	ε_G	ppm		±7		
AC amplitude error 10 Hz - 500 Hz 500 Hz - 3 kHz 3 kHz - 30 kHz 30 kHz - 100 kHz 100 kHz - 400 kHz 400 kHz - 1 MHz	ε_G	%		±0.005 ±0.01 ±0.1 ±0.4 ±1 ±3		
Output noise	noise	µVrms			300	Measurement bandwidth: DC to 1MHz
Effects of temperature Amplitude sensitivity Offset voltage		ppm of reading/ºC ppm of full scale/ºC	-15 -0.1		15 0.1	Within the range of –40ºC to 18ºC or 28ºC to 85ºC
Effects of magnetization		mA			1	Input equivalent, after 200 A DC is inputted
Common mode rejection ratio DC to 1 kHz 1 kHz to 10 kHz 10 kHz to 100 kHz 100 kHz to 1 MHz	CMRR	dB	 150 140 120 100			(Effect on output voltage/common-mode voltage) Refer to “Figure 4. CMRR characteristics”
Effects of conductor position DC 50/60 Hz 1 kHz 10 kHz 100 kHz		% of reading	 -0.004 -0.005 -0.04 -0.04 -1.2		 0.004 0.005 0.04 0.04 1.2	When wire of outer diameter 10 mm is used
Effects of external magnetic field		mA			2	Input equivalent, under a magnetic field of 400 A/m, DC
					25	Input equivalent, under a magnetic field of 400 A/m, 60 Hz
Effects of radiated radio-frequency electromagnetic field		% of full scale			0.5	10 V/m
Effects of conducted radio-frequency electromagnetic field		% of full scale			0.1	10 V
Fluxgate excitation frequency	f_{Exc}	kHz		10.4		
Power supply voltages	U_C	V	±11.5		±15	
Positive current consumption	I_{PS}	mA			250	DC + 400 A with ±12V
Negative current consumption	I_{NS}	mA			-250	DC – 400 A with ±12V

Isolation specifications

Parameter	Unit	Value	Comment
Rated insulation RMS voltage, basic insulation	V	1000	IEC 61010-1 conditions • over voltage cat III • pollution degree 2
Rated insulation RMS voltage, reinforced insulation	V	1000	
RMS voltage for AC isolation test, 50/60 Hz, 1minute	kV	7.4	Between primary and secondary (and shield) Sensed current: 1 mA
Clearance	mm	23.4	Shortest distance through air
Creepage distance	mm	23.4	Shortest path along device body
Comparative tracking index (CTI)	V	< 250	Performance level category (PLC)= 3
Standards	Safety: EN 61010 EMC: EN 61326		

All information correct as of November 10, 2025.
Company names and product names appearing in this catalog are trademarks or registered trademarks of various companies.
All specifications are subject to change without notice.

1.888.610.7664 www.calcert.com sales@calcert.com

AC/DC CURRENT SENSOR

Environmental and mechanical characteristics

Parameter	Symbol	Unit	Min.	Typ.	Max.	Comment
Operating environment (altitude)		m			2000	Indoor use, pollution degree 2
Ambient operating temperature range	T_A	ºC	-40		85	
Ambient storage temperature range	T_{Ast}	ºC	-40		85	
Relative humidity	RH	%			80	Non-condensing
Protection against mechanical impacts	IK07					Energy level: 2 J, test height defined in EN 61010 Safety requirements: 400 mm
Measurable conductor diameter	D_{meas}	mm			24	
Dimensions	W H D	mm		70 100 53		Refer to “Figure 5. Dimensions”
Output cable length CT6873 CT6873-01	L_{cable}	m		3 10		
Mounting hole diameter	D_{mout}	mm		ϕ4.8		M4 screws, recommended tightening torque: 1.2 Nm to 1.5 Nm
Weight CT6873 CT6873-01	m	g		370 690		

Measurement accuracy (total accuracy including uncertainty in calibration system etc.)

Frequency [Hz]	Amplitude		Phase [±º]
	[±% of reading]	[±% of full scale]	
DC	0.03	0.002	-
DC < f < 16	0.1	0.01	0.1
16 ≤ f < 45	0.05	0.01	0.08
45 ≤ f ≤ 66	0.03	0.007	0.05
66 < f ≤ 100	0.04	0.01	0.1
100 < f ≤ 500	0.05	0.01	0.15
500 < f ≤ 3 k	0.1	0.01	0.4
3 k < f ≤ 5 k	0.2	0.02	0.4
5 k < f ≤ 10 k	0.2	0.02	0.5
10 k < f ≤ 1 M	0.018 × f	0.05	0.04×f+0.1
Frequency range	10 MHz (±3 dB typical)		-

Electrical specifications at T_A = 23ºC ±5ºC, supply voltage (by using external PSU) = ±12 V unless otherwise stated

- The variable f in accuracy equations is expressed in kHz.
- Accuracy of amplitude and phase is specified with 110% of full scale input or less and not exceeding derating curve in Figure 1. Accuracy in range of DC < f < 10 Hz are design values.
- Add ±0.01% of reading to amplitude accuracy when input is 100% to 110% of full scale.
- For the CT6873-01, add the following values to accuracy in the range of 1 kHz < f ≤ 1 MHz.
  Amplitude accuracy:±(0.005 × f [kHz])% of reading
  Phase accuracy: ±(0.015 × f [kHz])º
- Combined accuracy with HIOKI power analyzer PW8001, PW6001 and PW3390 is specified (DC, 45 Hz ≤ f ≤ 66 Hz).

to the

Definition of on accuracy

(total accuracy including uncertainty in calibration system etc.)

Reading (displayed value) error:
Indicates the value displayed by the instrument. Limit values for reading errors are expressed as a percentage of the reading (“% of reading” or “% rdg”).

Range error:
Indicates the instrument’s range. Limit values for range errors are expressed as a percentage of the range (“% of range”).

Full scale (rated current) error:
Indicates the rated current. Limit values for full-scale errors are expressed as a percentage of full scale (“% of full scale” or “% f.s.”).

Calibration:
The accuracy of HIOKI products includes all factors that affect the measurement results, such as calibration system errors, ambient temperature, and secular change, as “**uncertainty**”.

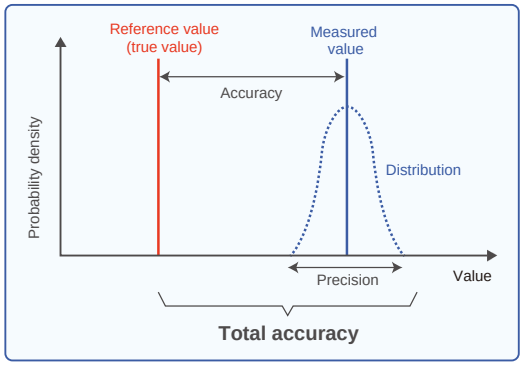

HIOKI is accredited as an official ISO/IEC 17025 calibrator.

All information correct as of November 10, 2025.
Company names and product names appearing in this catalog are trademarks or registered trademarks of various companies.
All specifications are subject to change without notice.

1.888.610.7664 www.calcert.com sales@calcert.com

AC/DC CURRENT SENSOR

Specific accuracy calculation example

How to measure the current of **DC 100A** of a conductor with a diameter of ϕ20 mm or less with high accuracy.
Guaranteed specifications at T_A = 23°C ±5°C

Measuring instrument configuration	CT6873,CT6873-01	CT9555	L9217 + 9704	DM7276
External view				
Range (connection)	200 A (2000 mV)	Front OUTPUT terminal (BNC terminal)	✓	1000 mV
Output voltage	**100A** × 2000 mV / 200 A = 1000 mV			-
Error (reading)	0.03%	-	-	0.0011%
Error (full scale)	0.002%	-	-	3 µV
Total error	1000 mV × (0.03 + 0.0011)% + 2000 mV × 0.002% + (3 µV × 10^{-3}) mV = 0.354 mV			
Total error (input equivalent)	0.354 mV / 2000 mV × 200 A = 0.0354 A			
Error range	**100 A ± 0.0354 A → 99.9646 A to 100.0354 A**			

Definition of linearity error

Linearity error εL:
Indicates that the output (current or voltage) changes linearly in response to the input current.
A regression line is attained by measuring the output voltage in the sequence below in 40 A intervals:

+200 A → 0 A → −200 A → 0 A → +200 A

It is defined as the difference between the regression line calculated from the above measurements and the measurement points.

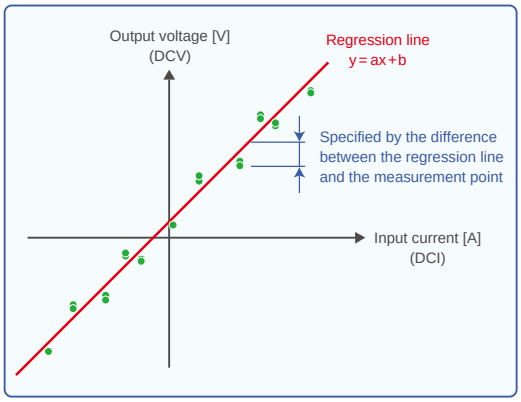

Definition of offset error

Offset error εO:
Specified by the ratio of the average value (µ) of the measured values of the offset voltage and the rated current (Imax) of each current sensor.

$$\varepsilon_O = \mu / I_{max}\ [\mathrm{ppm}]$$

Definition of amplitude error

Amplitude error εG:
An index showing the degree of flatness of the frequency characteristics of gain.
DC error is defined as (linearity error + offset error).
AC error is defined as deviation from the 55 Hz measurement point.

$$\varepsilon_{GDC} = \varepsilon_L + \varepsilon_O\ [\mathrm{ppm}]$$

$$\varepsilon_{GAC} = \frac{Gain\,(f) - Gain\,(55\ \mathrm{Hz})}{Gain\,(55\ \mathrm{Hz})} \times 100\ [\%]$$

HIOKI E.E. CORPORATION

All information correct as of November 10, 2025.
Company names and product names appearing in this catalog are trademarks or registered trademarks of various companies.
All specifications are subject to change without notice.

1.888.610.7664 www.calcert.com sales@calcert.com

AC/DC CURRENT SENSOR

Figure 1. Frequency derating

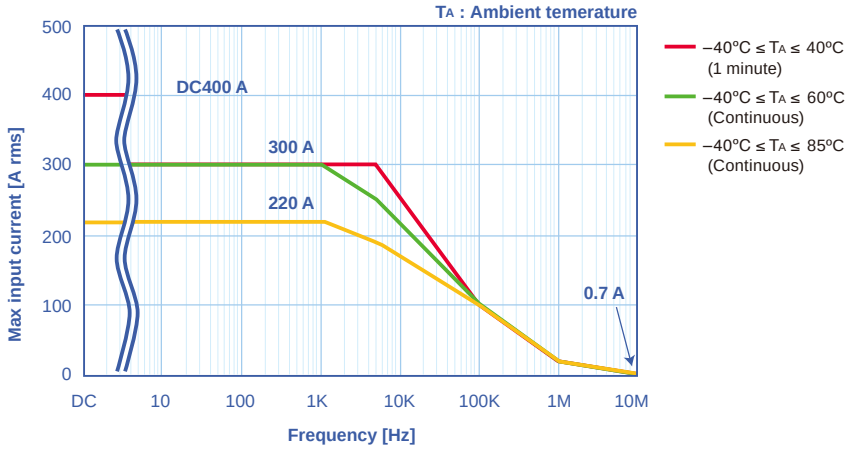

Figure 2. Frequency characteristics

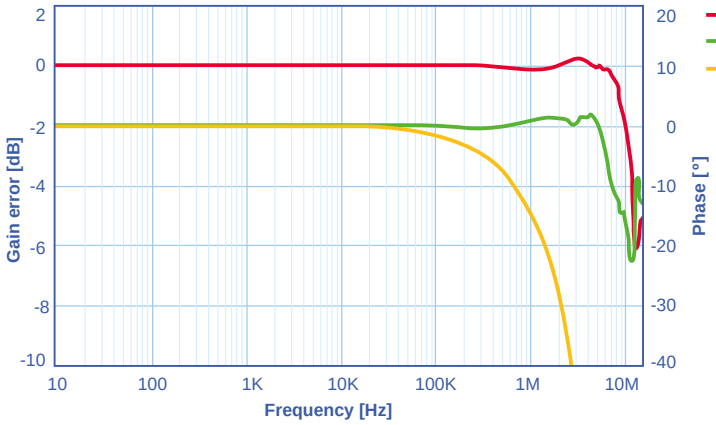

Phase Compensation Values

Enter the following values (representative values) when performing phase compensation on the PW6001 or PW3390. When connected to the PW8001 or PW4001, the phase correction value of the individual product will be set automatically.

▼

CT6873: 100 kHz, -0.75°
CT6873-01: 100 kHz, -2.10°

Figure 3. Linearity error characteristics

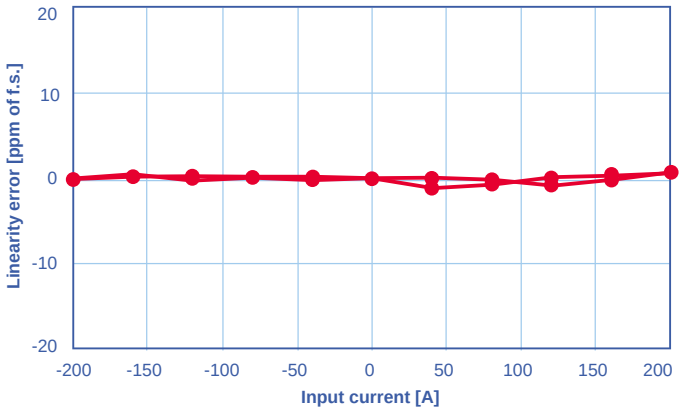

All information correct as of November 10, 2025.
Company names and product names appearing in this catalog are trademarks or registered trademarks of various companies.
All specifications are subject to change without notice.

1.888.610.7664 www.calcert.com sales@calcert.com

Figure 4. CMRR characteristics

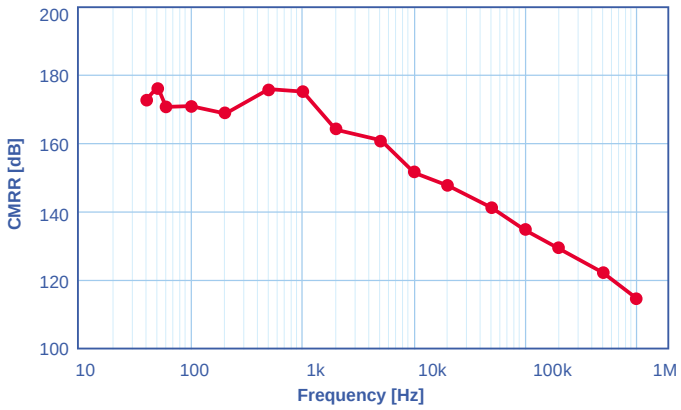

All information correct as of November 10, 2025.
Company names and product names appearing in this catalog are trademarks or registered trademarks of various companies.
All specifications are subject to change without notice.

1.888.610.7664 www.calcert.com sales@calcert.com

AC/DC CURRENT SENSOR

Figure 5. Dimensions

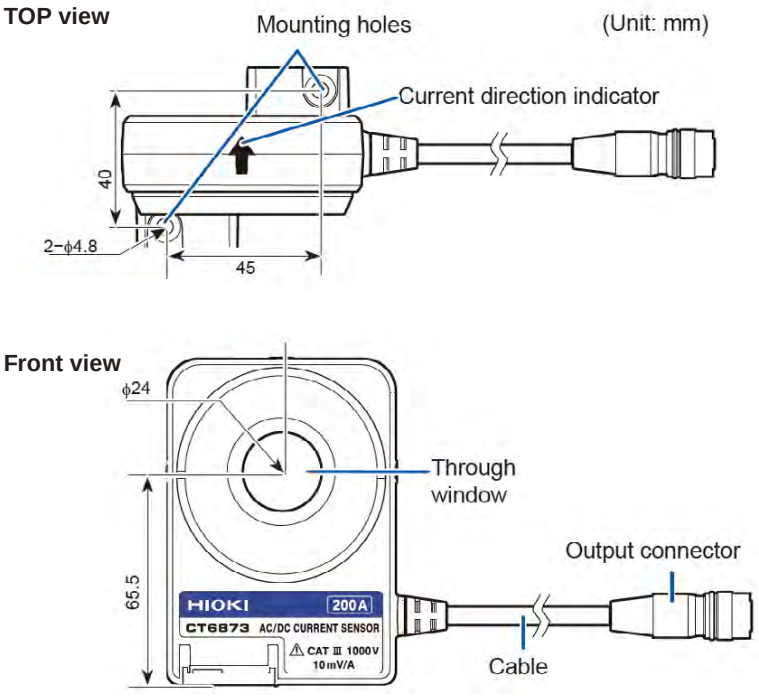

Figure 6. Pin assignment (when not using the sensor units CT9555, CT9556, or CT9557)

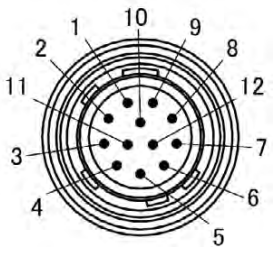

Output connector
HIOKI ME15W of current sensors
HIROSE ELECTRIC CO., LTD.
HR10A-10P-12P(74)

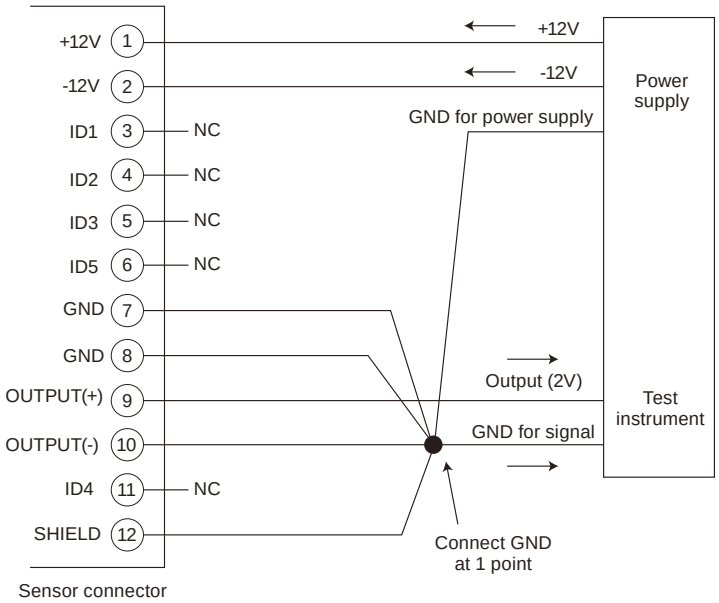

All information correct as of November 10, 2025.
Company names and product names appearing in this catalog are trademarks or registered trademarks of various companies.
All specifications are subject to change without notice.

1.888.610.7664 www.calcert.com sales@calcert.com

AC/DC CURRENT SENSOR

Figure 7. Options and main combination

The CT9557 not only functions as a 4-channel power supply, but can also output additive waveform and RMS output from up to four input waveforms.

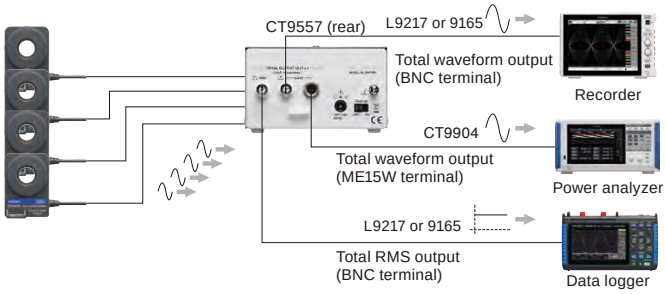

CT9904 CONNECTION CABLE
ME15W (12 pin) terminal - ME15W (12 pin) terminal
The CT9904 is the cable for the CT9557 addition output and POWER ANALYZER PW8001/PW6001/PW3390 connection.

CT9902 EXTENSION CABLE
ME15W (12 pin) terminal - ME15W (12 pin) terminal
The CT9902 can be used to extend a current sensor's cable by 5m. Up two of these cables can be used for a maximum extension of 10 m.
*When using the CT9902, an additional accuracy needs to be added. For details, see the sensor's user manual.

All information correct as of November 10, 2025.
Company names and product names appearing in this catalog are trademarks or registered trademarks of various companies.
All specifications are subject to change without notice.

1.888.610.7664 www.calcert.com sales@calcert.com