TEL-TRU TEMPERATURE SOLUTIONS

Customer Focused Since 1916.

CHECK-SET® Thermometer Calibrator

USER GUIDE

Check-Set®
Calibrator

1.888.610.7664 www.calcert.com sales@calcert.com

OVERVIEW

QUICK START GUIDE

1. **Register your new Check-Set at** http://www.teltru.com/check-set-warranty
   a. Ensures warranty coverage for one year
   b. Provides valuable information on how to have your Check-Set recalibrated every year.
   c. Offers suggestions on how to keep your Check-Set running trouble free for years to come.
2. **Insert the power cord into the Check-Set Calibrator and a standard grounded outlet.**
3. **Turn on the switch located on the back the unit.**
4. **Set the rocker switch on the front the unit to the desired temperature and press the power button.**
5. **After a brief warm up period your Check-Set is ready for use. The unit is ready when you see the green light turn on.**
6. **Insert your thermometer and allow it to stabilize.**
7. **You're ready! Verify or calibrate your thermometer per the manufacturer's instructions.**

DETAILED INSTRUCTIONS

1. Light Indicators

Left Light	Right Light	Status
Off	Off	Unpowered/sleeping
Off	Blue	Operating, reaching temperature. Cannot be used to check/calibrate thermometers.
Green	Blue	Operating, at set point temperature. May be used to check/calibrate thermometers.
Red	Blue	Error. Cycle power to clear. Contact customer service if error persists

2. Safety

2.1 Grounding

The Check-Set must be connected to a grounded, 3-prong outlet during operation. Do not modify the cable or use a power cable without a ground connection. Failure to properly ground the unit creates the risk of electric shock and can distort temperature controls.

2.2 Moisture

The Check-Set is not designed to survive high moisture or washdown conditions. Any cleaning on/near the unit should be done with a damp cloth while the unit is unplugged. Failure to maintain a dry environment creates the risk of electric shock or damage to the unit.

2.3 Contaminants

The Check-Set is not designed to maintain a sterile environment. Any thermometers inserted into the unit may pick up debris/pathogens and must be treated as non-sterile when removed.

3. Installation Instructions

1. **Insert power cord in an AC GROUNDED outlet of the correct power rating.**
2. **Place the unit in a dry, ventilated area.**
   a. Ambient operating temperature must remain between 65°F (18.3°C) to 75°F (23.9°C).
   b. Maintain 3” minimum clearance around fan and vents.
   c. Avoid setting the unit on surfaces that may restrict air flow, such as carpet and towels.
   d. The tilt stand should be used to improve air circulation.
3. **Turn on switch in back.**
4. **Turn on the power switch. A blue light indicator in the front should turn on.**
5. **Select the desired temperature using the front switch on the device.**
6. **Allow the unit to warm up for 10-15 minutes. The green light should come on. This indicates the unit is ready for use. If the green light goes out, the unit is no longer in tolerance. Wait until the green light turns on again.**
7. **If the green light should remain out or the red light comes on, the Check-Set calibrator may not be working properly.**

4. Calibration Verification Procedure

1. **Insert thermometer probe into the smallest possible hole in the front panel of calibrator.**
2. **Allow thermometer to remain in the opening until its temperature readout stabilizes.**
3. **Compare thermometer reading to the set point temperature of the Check-Set calibrator.**
4. **Make any calibration adjustments to the thermometer per the manufacturer's calibration instructions.**

Recalibration Feature

A three hole removable well with a recalibration feature comes standard on both Check-Sets*. The recalibration feature is a metal piece located on the front of the removable well that has two notches (A) on either side of the openings. These notches fit either a 5/8" or 7/16" recalibration nut located on the back of the thermometer (B) and allows the user to recalibrate their thermometer** by hand-turning or using our recalibration wrench accessory during the verification process (C).

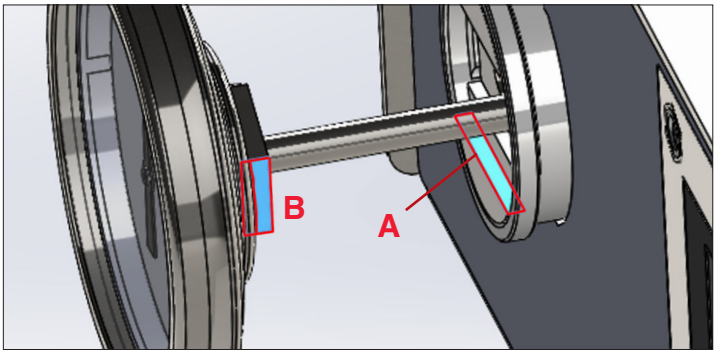

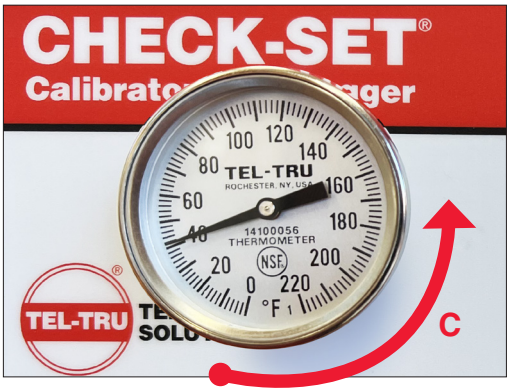

Hand-turn or use our recalibration wrench accessory to recalibrate the thermometer.

*Additional well inserts sold separately. See accessories.

**Only available for thermometers with stem sizes of 0.125", 0.150" and 0.187"

Calibration Procedure

To calibrate a thermometer with the in-built recalibration feature, your thermometer must be:

- **Greater than 3.5 inches**
- **Less than 6 inches**
- **Have a recalibration nut**

To calibrate your thermometer:

1. Insert your thermometer completely into the Check-Set Calibrator
2. Rotate your thermometer while pushing in gently. The thermometer should move slightly as the recalibration nut fits within the notches. Stop rotating once the recalibration nut catches on the notches.
3. Allow your thermometer indicator pointer to stabilize.
4. With your hands or with a thermometer wrench, rotate the thermometer head until the temperature indicator pointer is pointing at the set point of the Check-Set Calibrator.
5. Your thermometer is now calibrated.

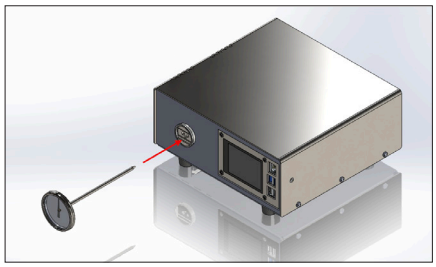

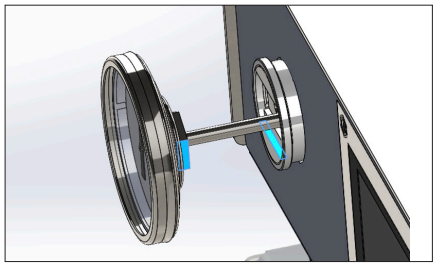

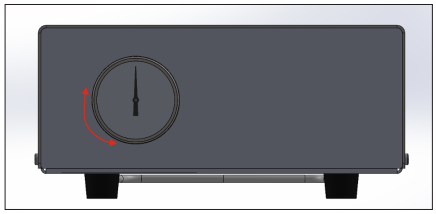

Maintenance

Daily

- When not in use, put the Check-Set Calibrator into sleep mode by pressing the power switch. The fan may run for a few minutes during a cooldown period
- Wipe thermometers clean prior to insertion into the unit. Any debris on the thermometers can accumulate in the well

Monthly

- Clean the well by removing and cleaning with the brush kit
- Re-grease the well with the recommended 2.5 grams of Conductivex Thermo-Grease FDA 7. With the included syringe, grease the outside of the removable well and with the remaining syringe, grease the inside of the brass core.
- Clean the fan filter
  - Do not remove filter screws
  - Pop-out filter guard with your fingers
  - Remove the filter and clear any dust or lint in filter
  - Place filter back on
  - Put filter guard back on

Yearly

Return the unit to Tel-Tru for recalibration/recertification.

Accessories

The Check-Set Calibrator has multiple accessories to maintain the device or for compatibility with different sized thermometers. These accessories can be purchased at teltru.com.

	Catalog Number
Brush Kit 2 (Lg & Sm)	96100145
Heat Sink Compound	96100340
Thermometer Calibration Wrench	96100055
Shoulder Strap	961100224
Check-Set Wells:	
a. 1 hole, 3/4"	96100254
b. 1 hole, 1/2"	96100253
c. 1 hole, 3/8"	96100252
d. 3 hole, 3/16", 1/4", 3/8"	96100250
e. 3 hole, Recal, 1/8", 5/32", 3/16'	96100249

Warranty

The Check-Set Calibrater comes with a one year warranty.

Recertification

Quality Services Provided:

- Inspection performed by a Quality Technician in the Tel-Tru Lab
- Thorough interior cleaning
- Testing of set points
- NIST traceable calibration inspection sticker and certification
- Fast turnaround! 5 business days from when the unit arrives at Tel-Tru

To recertify your unit, follow these quick and easy steps:

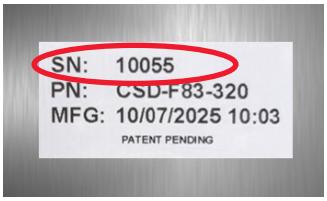

1. Go to: https://www.teltru.com/product/re-certification-for-check-set/
2. Enter your serial number (see image).
3. Click "Add to Cart" and "Check Out."
4. A confirmation email will be sent with a **4 digit Order ID number**, this will serve as your **RMA number** to be placed on the exterior of the shipping box.
5. Ship to Tel-Tru using these packing and shipping instructions.

STEP 1

Identify your unique return identification number.

a.) Online orders:

Order number appears on receipt email (Figure 1)

or

b.) Orders by phone:

RMA # provided by customer service agent

Figure 1

Order Details

Order number: 3864 *Order date: December 17, 2024*

Product	Quantity	Price
Re-Certification for Check-Set (#9610CS81) **Serial Number:** 8010 **Serial Number:** 8010	1	$230.00

STEP 2

Pack Check-Set securely in box (Figure 2)

If original packaging is not available, any shipping box is acceptable. *Please ensure the unit is secured to avoid damage while in transit.*

Figure 2

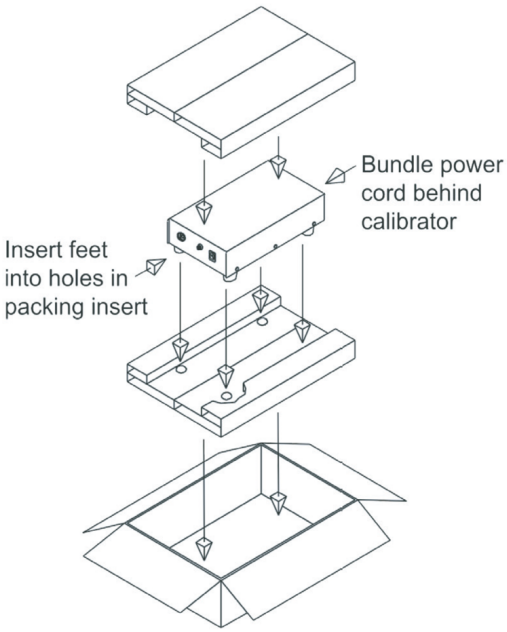

STEP 3

Address and ship package to:

Tel-Tru Manufacturing Co.
ATTN: Customer Returns
Order ID # or RMA #
408 St. Paul Street
Dock @ 10 Ward Street
Rochester, NY 14605

DO NOT FORGET to place Order Number OR RMA # on the shipping label.

Customer is responsible for freight costs when shipping unit to Tel-Tru.

Frequently Asked Questions

1. What do the lights mean?

a. The Check-Set Calibrator has 3 indicator lights
   i. Blue – The unit is powered and on
   ii. Green – The unit has reached temperature
   iii. Red – An error was detected

2. A red light has come on, what should I do?

a. The red light indicates that the was an error within the Check-Set Calibrator.
b. To handle the error you can:
   i. Turn the Check-Set Calibrator off and on again. This may clear any software errors.
   ii. Make sure the Check-Set Calibrator is in an environment between 65°F (18.3°C) to 75°F (23.9°C).
   iii. Make sure nothing is blocking the fan in the back or the vent on the side of the device.
   iv. If the red light persists, please contact Customer Service.

3. How long does the Check-Set Data Logger take to get to temperature?

a. For the 32°F (0°C) / 212°F (100°C) units, it takes approximately 15 minutes to get to temperature
b. For the 40°F (4.4°C) / 160°F (71°C) units, it takes approximately 10 minutes to get to temperature
c. If it takes longer than the allotted time, this could indicate the ambient temperature or the airflow is inadequate. Make sure the device is being used in an environment between 65°F (18.3°C) to 75°F (23.9°C). Make sure nothing is blocking the fan in the back or the holes on the side of the device.
d. If the device still does not reach temperature, the Check-Set will turn on the red error light to indicate there is an issue. Please contact customer service.

4. What thermometers can I use?

a. The default core that comes with the Check-Set Calibrator has holes for thermometers with stems of a diameter of .125", .150" and .187". For different diameter stems, check additional cores available for purchase at Tel-Tru.com
b. All stems must have a minimum length of 3.5". This ensures the thermometer is being properly controlled.

5. My thermometer is too big/small for the holes in the Check-Set. What should I do?

a. Additional cores are available for purchase at Tel-Tru.com
b. Additional cores include:
   i. 1-hole ¾" Well
   ii. 1-hole ½" Well
   iii. 1-hole 3/8" Well
   iv. 3-hole 3/16", ¼", 3/8" Well

- Sanitary Bimetal Thermometers
- Industrial and Sanitary RTDs
- Industrial and Sanitary RTDs with Compact Transmitters
- Glow Dial Thermometers
- Digi-Tel™ Thermometers
- Thermowells
- HVAC Instruments
- Gas Actuated Thermometers
- Vapor Tension Thermometers
- Check-Set® Thermometer Calibrators
- Non-Contact Thermometers
- Surface Thermometers
- Pressure Transmitters
- Pressure Gauges
- Sanitary Pressure Gauges
- Solar Digital Pressure Gauges

- Food & Beverage
- BioTech
- Defense
- Transportation
- Agriculture
- Construction, HVAC and Property Management
- Solid Waste & Wastewater
- Industrial Processing

TEL-TRU® TEMPERATURE SOLUTIONS

1.888.610.7664 www.calcert.com sales@calcert.com