VEE GEE®

Analytical Instruments

Operation Manual

Model C10

Abbe Refractometer

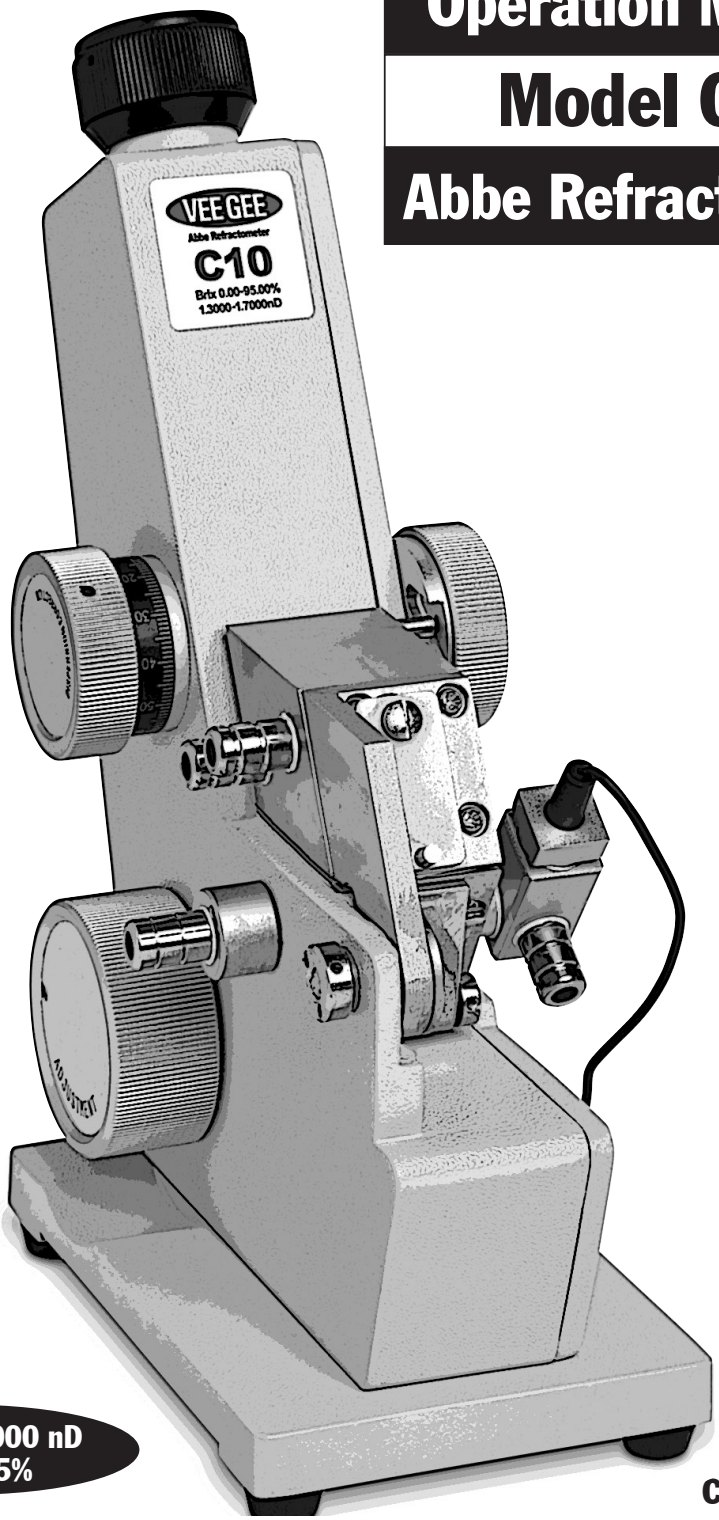

1.3000-1.7000 nD
Brix 0-95%

Catalog No. C10

1.888.610.7664 www.calcert.com sales@calcert.com

VEE GEE Model C10 Operation Manual

1.3000-1.7000 Refractive Index & 0-95% Brix Abbe Refractometer

Contents

Introduction..... 3
Safety Precautions..... 3
Maintenance..... 3
Inspection..... 3
Refractometer Components..... 4-5
Calibration
Liquid Calibration..... 6
Solids Calibration..... 6
Connecting A Circulator..... 6
Measuring Liquids..... 7
Measuring Transparent Solids..... 7
Measuring Translucent Solids..... 7
Specifications..... 7

Warranty information and a registration card
can be found

Disclaimer: The information provided in this operation manual is believed to be accurate and reliable at the time of printing. However, no responsibility shall be assumed by VEE GEE Scientific for its use. The information contained in this document is subject to change without notification.

This product is designed and intended for use only as a refractometer system. Modifying the product in any manner for use not originally intended shall automatically void the manufacturer's warranty. In no event shall VEE GEE Scientific LLC be held liable for any incidental or indirect damage arising from the use of modified or altered product.

All rights reserved. No part of this document may be reproduced or transmitted in any form without the prior written consent of VEE GEE Scientific LLC.

©2020 VEE GEE Scientific LLC

For information about parts, accessories, or service -
contact your VEE GEE dealer or contact VEE GEE Scientific

1.888.610.7664 www.calcert.com sales@calcert.com

VEE GEE Introduction

Thank you for purchasing this VEE GEE Refractometer. With the user in mind, VEE GEE Refractometers are built from modern designs and, with proper care, this instrument should provide many years of reliable performance. It's recommended this manual is read entirely before using the refractometer for the first time.

VEE GEE Model C10 Abbe Refractometer is designed to measure the refractive index (nD) values of transparent and translucent solids and liquids. A constant temperature circulator can be attached to this instrument to stabilize refractive index readings and add to the instrument's accuracy and reproducibility. The temperature range should be kept between 0°C and 70°C.

Measuring nD values is useful for many types of applications. Since every transparent and translucent liquid and solid has a specific refractive index, the instrument can be used for identification, to check purity, etc. The Brix scale can be used for measuring the concentration of water soluble solutions such as salt, sucrose, urine, oils, sugar, etc.

Abbe Refractometers are often used as the standard for checking handheld refractometers and results from other types of instruments because of its consistent and reliable results.

VEE GEE Safety Precautions

⚠ This refractometer is an optical instrument. Do not shake or jolt the instrument. The impact may damage or cause the optical components to shift which will result in inaccurate readings.

⚠ The prism is made of optical glass and is susceptible to scratches -- do not apply any rough or abrasive material and take care when cleaning the prism.

⚠ After each use, clean the primary and secondary prism surfaces with a soft cloth or tissue dampened in water and wipe off with a dry cloth or tissue.

⚠ Do not hold the refractometer under a stream of water from a faucet. Do not splash it with or dip it in water.

⚠ If the surface of the prism becomes coated with an oily solution or similar, it will repel test samples and affect readings. If this occurs, the prism should be cleaned with a mild detergent or similar solvent.

⚠ Keep the instrument in a dry, well-ventilated room.

VEE GEE Maintenance

1. The refractometer body can be cleaned using water and mild detergent with a soft cloth or tissue. Do not use harsh chemicals as this may damage the painted surfaces. Do not immerse or allow large amounts of water to splash onto the instrument.

2. After each use, clean the prisms and any over-spill using water and mild detergent then wipe dry with a soft cloth or tissue and allow to air dry.

3. Use only specially formulated lens cleaning fluids and tissues to clean the optical components of the instrument. Failure to do so may result in scratched lens surfaces.

VEE GEE Inspection

Upon receiving your VEE GEE Model C10 Abbe Refractometer, check to see that all parts are functioning and focusing properly and that the following items are supplied with your instrument:

1. Digital Thermometer w/ LR44 Batteries (1 set)
2. 1.5160nD Glass Standard (1 ea.)
3. Calibration Screwdriver (1 ea.)
4. Operation Manual (1 ea.)

VEE GEE Refractometer Components

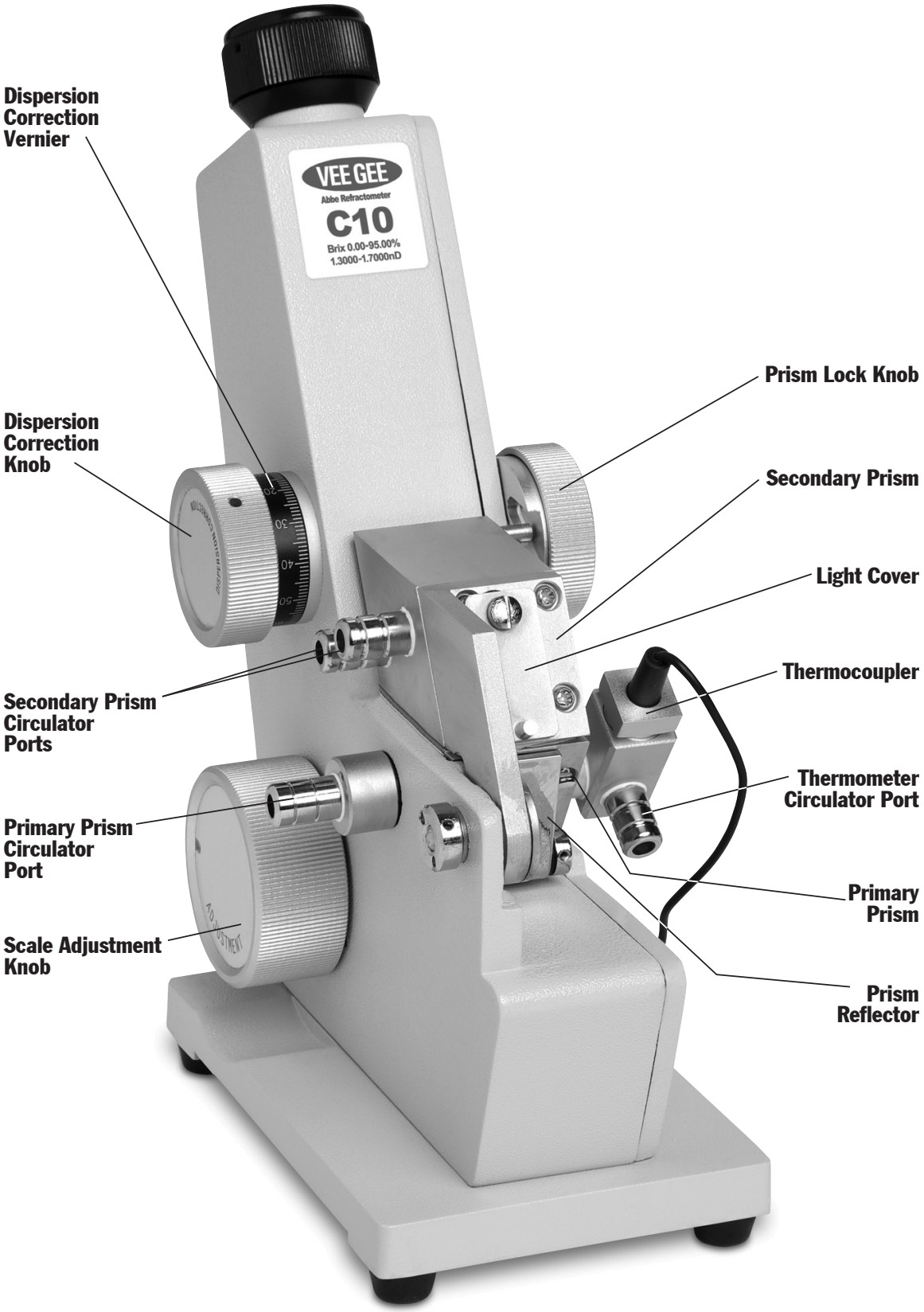

VEE GEE Refractometer Components

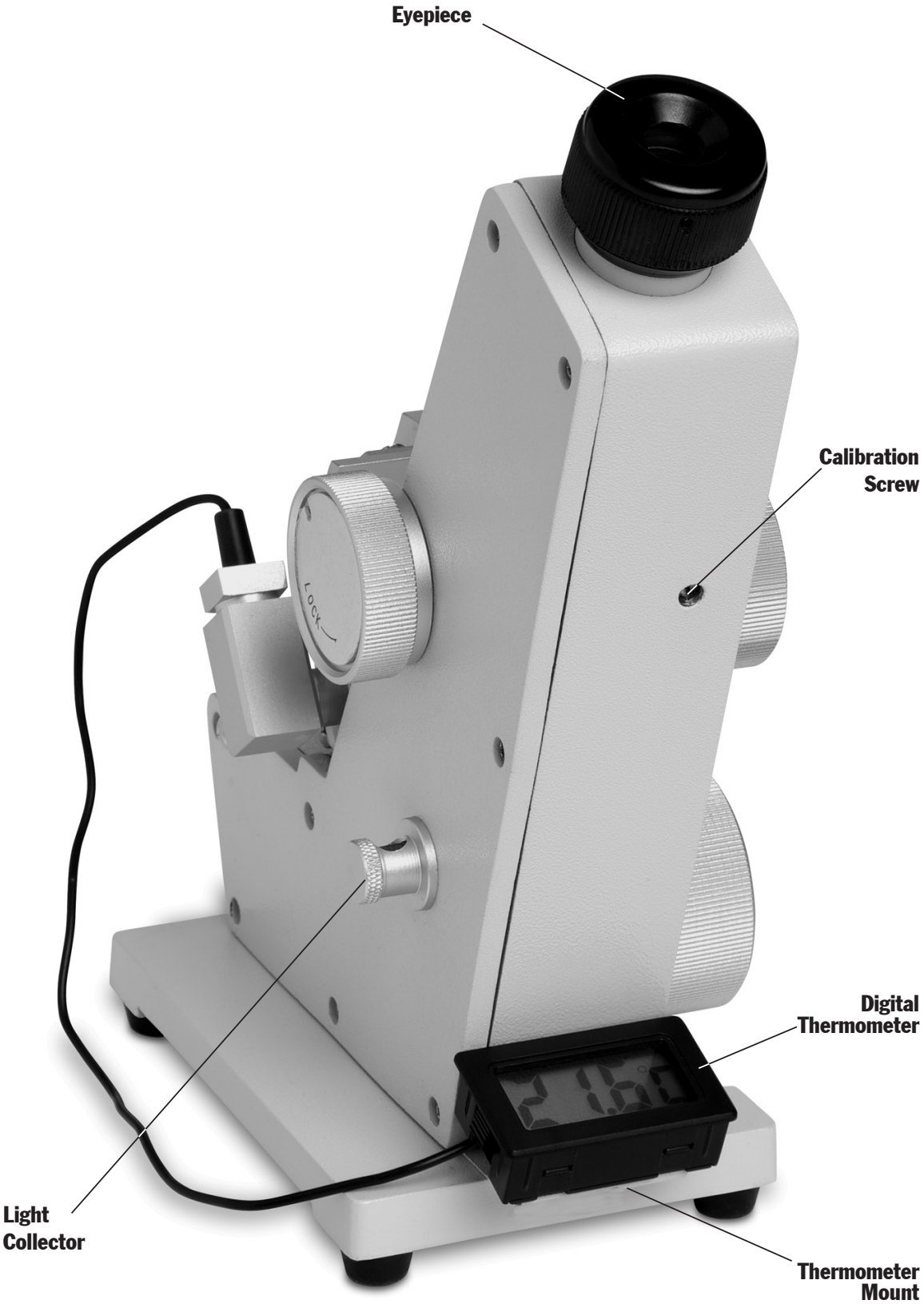

VEE GEE Calibration

It is considered good laboratory practice to calibrate this refractometer using the liquids calibration procedure on a daily basis. Listed below also is a solids calibration procedure that can be performed occasionally if desired or as a part of your organization's SOP.

Liquid Calibration

1. Unlock and open the secondary prism.
2. Place 2-3 drops of distilled water on the primary prism.
3. Close and lock the secondary prism. Be sure the liquid covers the prism surface completely, without any gaps or bubbles.
4. Rotate the light collector toward a bright ambient light to provide the best illumination for the display.
5. Open the light cover.
6. Close the prism reflector.
7. While looking through the eyepiece rotate it in either direction to focus on the crosshair inside.
8. Turn the scale adjustment knob to find the position of the halftone boundary line.
9. Turn the dispersion adjustment knob to remove color from (and sharpen the image of) the boundary line.
10. Turn the scale adjustment knob until the boundary line intersects with the crosshair.
11. Distilled water should read 1.3330 nD or Brix 0.0%. If it does not, use the included screwdriver to adjust the calibration screw to move the line to the correct position.

Solids Calibration

1. Unlock and open the secondary prism.
2. Place one drop of contact liquid (1-bromonaphthalene or similar with higher RI than the glass standard) on the primary prism. The contact liquid is sold separately, contact our customer service department or your VEE GEE dealer for more information.
3. Place the glass standard on the primary prism, polished side down.
4. Rotate the light collector toward a bright ambient light to provide the best illumination for the display.
5. Close the prism reflector.
6. While looking through the eyepiece rotate it in either direction to focus on the crosshair inside.
7. While looking at the internal scale turn the scale adjustment knob to the nD value etched on the glass standard.
8. Turn the dispersion adjustment knob to remove color from (and sharpen the image of) the boundary line.
9. The boundary line should lie in the center of the crosshair. If it does not, use the included screwdriver to adjust the calibration screw to bring the line into the correct position.

VEE GEE Connecting A Circulator

The temperature of the prism assembly can be regulated with the use of a constant temperature circulator. This will improve the accuracy of the refractometer. Using a circulator is not absolutely necessary though.

1. Connect the circulator to the four circulator ports using rubber hose for both the primary and secondary prisms. A thermometer is provided the read the temperature of the prism assembly.
2. To connect the thermometer, insert and thread the thermocoupler into the thermometer port until fully sealed. DO NOT OVERTIGHTEN.
3. Open the battery door on the back of the thermometer body and insert both LR44 button cell batteries. The diagram on the battery door indicates the correct polarity. Replace the battery door.
3. Place the thermometer onto the thermometer mount. The thermometer will be held in place by magnets within the thermometer body.

VEE GEE Measuring Liquids

To find the refractive index or Brix value of any transparent or translucent liquid, the steps are similar to the calibration procedure.

1. Place 2-3 drops of the sample liquid on the surface of the primary prism.
2. Close and lock the secondary prism. Be sure the liquid covers the prism surface completely, without any gaps or bubbles.
3. Adjust the scale illuminator to provide the best illumination for the display.
4. Open the light cover.
5. Close the prism reflector.
6. Focus the eyepiece on the crosshairs.
7. Turn the adjustment knob to find the position of the halftone boundary line.
8. Turn the dispersion adjustment knob to remove color from (and sharpen the image of) the boundary line.
9. Turn the scale adjustment knob until the boundary line intersects with the crosshairs.
10. The refractive index and Brix values can be read from the scale beneath the crosshairs.

VEE GEE Measuring Transparent Solids

1. The sample must have a smooth, polished surface. Place one drop of contact liquid (1-bromonaphthalene or similar with higher RI than solid sample) on the smooth surface and place it on the primary prism (smooth side down).
2. Adjust the scale illuminator to provide the best illumination for the display.
3. CLOSE the prism reflector.
4. Focus the eyepiece.
5. Turn the dispersion adjustment knob to remove color from (and sharpen the image of) the boundary line.
6. Turn the scale adjustment knob until the boundary line intersects with the crosshair.
7. The refractive index and Brix values can be read from the scale beneath the crosshair.

VEE GEE Measuring Translucent Solids

1. The sample must have a smooth, polished surface. Place one drop of contact liquid (1-bromonaphthalene or similar with higher RI than solid sample) on the smooth surface and place it on the primary prism (smooth side down).
2. Adjust the scale illuminator to provide the best illumination for the display.
3. OPEN the prism reflector.
4. Focus the eyepiece.
5. Turn the dispersion adjustment knob to remove color from (and sharpen the image of) the boundary line.
6. Turn the scale adjustment knob until the boundary line intersects with the crosshair.
7. The refractive index or Brix value can be read from the scale beneath the crosshair.

VEE GEE Specifications

Range:	1.3000-1.7000 nD 0.0-95.0% Brix	**Thermometer Range:**	-50 to +110° C
		Thermometer Accuracy:	±1.0° C
Resolution:	0.0005 nD 0.25% Brix	**Dimensions:**	140 x 100 x 235mm (5.5 x 3.9 x 9.3”)
		Weight:	4.5kg (9.9 lbs.)
Accuracy:	±0.0003 nD ±0.15% Brix		

VEE GEE®
Analytical Instruments