Instruction Manual

Model: AVC-25V

Criterion Dielectric Strength Tester

www.criterioninstr.com

Table of Contents

Introduction....3
Product Quality....3
Safety....3-4
Features....5
Included....5
Specifications....6
Instrument Description....7
Installation Instructions....8
Operating Instructions....9-12
Guidelines....9-10
Initial Test....10
Test Procedure....11
Maintenance and Calibration....13-14
Trip Current Calibration....13
Voltmeter Calibration....14
Fuse Replacement....15
Applications....15
Appendix....16
Product Warranty....18
Product Disposal and Recycling....18
Product Support....19

Introduction

Thank you for purchasing your AVC-25V Dielectric Strength Tester. This high-voltage power supply is designed especially for measuring dielectric strength or breakdown (often called the "HIPOT" test) as required by many CSA and UL specifications for both qualification and production testing. Please read the following instructions carefully before using your instrument. By following the steps outlined in this manual your meter will provide years of reliable service.

Product Quality

This product has been manufactured in an ISO9001 facility and has been calibrated during the manufacturing process to meet the stated product specifications.

Safety

- This equipment operates at high voltage (2500V AC) and can pose a risk of electric shock or electrocution. Never touch exposed electrical connections while the unit is powered on.
- Only trained and qualified personnel should operate, maintain, or repair this equipment. Improper use can result in severe injury or death.
- High-voltage discharges and other sources of strong electric or magnetic fields may interfere with the proper functioning of heart pacemakers. Personnel using heart pacemakers should obtain expert advice on the possible risks before operating this equipment or being close to the equipment during operation.
- Before testing, ensure that all insulation on the equipment under test is intact and capable of withstanding the applied voltage. Failure to do so may result in damage to the equipment or inaccurate test results.
- Always ensure proper grounding of both the equipment under test and the tester itself. Failure to ground the tester properly can result in inaccurate readings or damage to the equipment.

continued...

- Wear appropriate personal protective equipment (PPE), including insulated gloves and safety goggles, when operating the tester to protect against potential hazards.
- Do not use this equipment in hazardous environments where flammable gases, vapors, or dust are present unless the equipment is specifically designed and certified for such use.
- Ensure that the testing environment is dry and free from moisture to prevent electrical arcing or short circuits.
- Always disconnect power from the equipment under test before connecting or disconnecting the tester to prevent electrical accidents.
- Familiarize yourself with the operation and usage instructions provided in this manual before using the equipment. Failure to follow these instructions may result in damage to the equipment or injury to personnel.
- Regularly inspect the tester for signs of damage or wear, and perform any necessary maintenance or calibration according to the manufacturer's recommendations.
- Store the tester in a dry and secure location when not in use to prevent damage and unauthorized access.
- In the event of an electrical accident or malfunction, immediately turn off power to the equipment and seek assistance from qualified personnel.

Features

- For dielectric strength testing of electrical appliances, motors, radios and electronic devices
- Cover more than 75% of the requirements for test voltages called up by CSA, HEPC and UL for breakdown testing
- Input 120V, 60Hz rated at 500VA, suitable for equipment up to 75H.P. or 50kVA
- Continuously adjustable output potential from 0 to 2500VAC
- Indicator lamps for power on, high voltage on, fault and ground fault
- Automatic cut-out
- Continuously indicating high-voltage voltmeter
- Test set incorporates a special AC line tester and ground sensor, which disables the test set unless the outlet into which it is plugged is correctly wired
- Portable, plug-in unit
- Heavy duty retractable probe

Included

- Dielectric Strength Tester
- Conformity Certificate
- User's Manual

Specifications

Input:	120V/60Hz
Output:	Adjustable 0 to 2500V AC at 95mA
Transformer:	Rated 500VA
Voltmeter:	0 to 2500V AC Accuracy: +/- 2% of full scale
Trip Current:	Fixed at 95mA +/- 5%
Indicators:	4 lights (power on, high-voltage-on, fault and line-fault)
Control:	One on/off switch, one fuse, one reset push-button, one high-voltage adjust knob and safety device for faulty power outlet
Leads:	One-input line-cord, one ground lead and one high-voltage lead C/W a retractable probe. Each is 6' (2m) long
Dimensions:	11 x 6.5 x 6.5" (28 x 16 x 16cm)
Weight:	20lbs (9kg)

Instrument Description

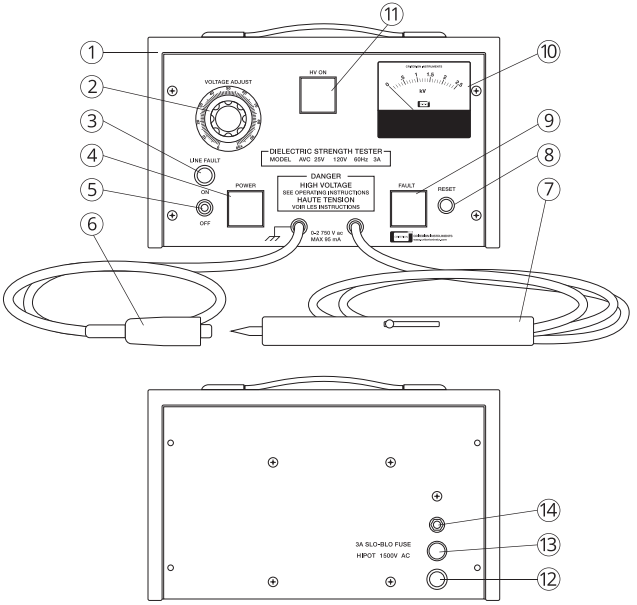

1. Cabinet
2. VOLTAGE ADJUST Knob
3. LINE FAULT Indicator Light
4. POWER Indicator Light
5. ON/OFF Switch
6. Alligator Clip
7. Heavy Duty Retractable Probe
8. RESET Button
9. FAULT Indicator Light
10. Voltmeter
11. High Voltage Warning Indicator Light
12. Instrument Power Plug
13. 3A SLO-BLO Fuse Port
14. Ground Connection

Installation Instructions

The AVC-25V is supplied completely wired and ready for operation without special installation. Simply plug the line cord into any convenient 120-V AC line outlet.

NOTE: A 3-wire U-ground outlet is necessary to ensure proper grounding of the instrument cabinet. This instrument incorporates a special ground sensor. Unless the outlet into which it has been plugged is correctly wired and has a good ground, the test set will not operate, and a small red pilot lamp (LINE FAULT) will light, warning the operator that the wiring in their building is faulty. A momentary flicker of this lamp is normal when the power is turned on. If the lamp remains on, there is a wiring fault that must be corrected before proceeding. It is dangerous to operate any equipment when there is a line fault, particularly if there is a defective ground.

It is EXTREMELY IMPORTANT that the electrical ground is good. An extra GROUND terminal is provided at the rear of the cabinet, and it is recommended that this be connected to a separate, properly grounded source using wire of AWG #14 or larger.

WARNING: Ensure that the instrument is grounded. The GROUND terminal on the rear should be connected directly to the same metal conduit or structure known to be a reliable ground.

Operating Instructions

Guidelines Before Testing Begins

The relatively high voltages used in dielectric-strength testing pose significant dangers to life, necessitating utmost care in conducting such tests. The following precautions are considered minimal and, if adhered to, should ensure a reasonable level of safety:

- Test areas should be enclosed by fencing, partitions, or portable barriers painted red. Utilizing a safety cage whenever feasible is recommended.
- Access to test areas should be restricted to trained and authorized personnel only.
- Electrical equipment should never be handled when hands, feet, or body are wet or perspiring, or when standing on a wet floor. High-voltage gloves are advisable, particularly in high humidity or corrosive atmospheres, or where airborne solvents are present.
- Assume all floors are conductive and grounded under high-voltage conditions unless covered with well-maintained dry rubber matting suitable for electrical work. Such matting provides a safe platform for operators.
- Clearly visible warning signs cautioning against high voltage dangers should be prominently displayed around test areas, prohibiting entry for unauthorized personnel. Red warning lights should be activated when high voltage is active. High-voltage tests should only be performed by one person at a time to avoid potential accidents. However, an operator should never be left entirely alone, with assistance readily available in case of emergencies.
- Avoid touching the test clips when high voltage is active.
- High-voltage gloves must be worn when using the tester as a portable unit, ensuring safety when moving between test locations.

continued...

- When testing capacitors or cables, ensure complete discharge at the conclusion of the test. Momentary shorting of terminals may not suffice, as dielectric absorption can cause voltage to reappear shortly after removing the short. To mitigate this, maintain the short for an extended period, such as ten seconds, before confirming complete discharge.

Initial Test

We advise conducting daily tests on the unit according to the following procedure:

1. Set VOLTAGE ADJUST knob to zero.
2. Ensure the main power is OFF.
3. Short the high-voltage output to the ground clip.
4. Turn on the main.
5. Gradually increase the voltage.
6. Observe for tripping off, which should occur at a very low voltage if the unit is functioning properly.

It's important to note that due to the inherent resistance in the secondary winding of the transformer, achieving the 95mA threshold may not be possible at voltages lower than approximately 250V.

TYPICAL SET-UPS
(HIGH-VOLTAGE TEST ONLY)

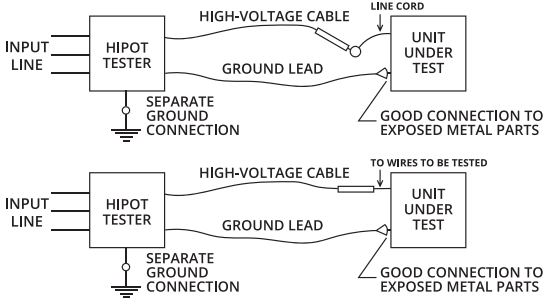

Test Procedure

1. Ensure the power on the equipment under test is OFF before beginning.
2. Confirm the VOLTAGE ADJUST Knob is set to the zero-voltage position, (fully counter clockwise).
3. Connect all supply leads or terminals on the item under test according to the specifications for this test.
4. Turn on all power switches, if applicable, on the item under test.
5. Attach the black-wire ground clip to an exposed metal part of the item under test.

WARNING: Ensure the alligator clip is connected to ground ONLY! It must be connected first and removed last.

Never hold it by hand while applying high voltage to the unit under test!

6. Turn on the test set power switch. Both the green POWER Indicator Light and the amber LINE FAULT Indicator Light will illuminate.
7. Momentarily press the RESET button. The LINE FAULT Indicator Light will turn OFF, and the red High Voltage Indicator Light will illuminate.
8. Touch the high-voltage test probe to the terminal being tested (e.g., AC line input prongs on a typical small appliance). Extend the probe by pushing the plastic screw-head on the side.
9. Turn the VOLTAGE ADJUST Knob clockwise until the voltmeter reads the desired test voltage, and maintain this voltage for the specified time.

OPTIONAL: You may maintain the voltage at the set value for production testing using the probe, but exercise extreme caution. This can be dangerous. Ensure the retractable probe is in good condition, and the operator is standing on a clean rubber mat with dry hands. Also, ensure the terminals to be tested on the unit under test are not connected to a capacitor, transformer, or suppressor. Otherwise, start the test at zero voltage and increase it to the desired value, as described earlier.

continued...

10. If the leakage exceeds the set value of the trip current, the high voltage will immediately be turned off, and the LINE FAULT Indicator Light will illuminate. Otherwise, the item being tested is deemed "good".
11. Press the RESET button to turn OFF the LINE FAULT Indicator Light and turn on the high voltage if necessary.
12. To repeat a test on the same unit, restart from step (8). Otherwise, turn off the test set, remove the ground wire, and return to step (3).

NOTE: Do not perform the dielectric test when there is a low-resistance load between the terminals to be tested or terminals to ground. An insulation-resistance test is recommended. (A dielectric test is nearly always conducted with a capacitive load.)!

WARNING: Never allow the output voltage to come into contact with a person! Even relatively low output voltage can result in a lethal shock!

Maintenance and Calibration

Maintenance, repair, and calibration of a high-voltage test set require specialized expertise and equipment, and are not suitable for DIY enthusiasts. The voltages involved pose significant dangers, and precise calibration of both the voltmeter and trip current is essential, particularly when testing to CSA or UL certification standards.

It is strongly recommended that your test set undergo a thorough check of its operation and calibration at least once a year by Criterion Instruments or an authorized Criterion Instruments Service Centre. More frequent checks may be necessary if the equipment is used extensively, and immediate attention is warranted if any malfunction is observed or suspected.

Trip Current Calibration:

High-voltage testers typically operate with a capacitive load, and it is advisable to test them accordingly. Some standards mandate this practice. Utilize a 0.25-uF capacitor with a minimum AC voltage rating of 5kV for loading purposes.

To check trip current sensitivity, connect the capacitor in series with an AC standard milliammeter (traceable if needed) in place of the test sample, ensuring proper grounding. The capacitor and meter should be placed on an adequately insulated surface.

Ensure the VOLTAGE ADJUST Knob is set to zero (fully counter clockwise), then power on the tester and press the RESET button. Slowly adjust the VOLTAGE ADJUST Knob clockwise, monitoring the milliammeter (disregarding the voltmeter reading). Record the current at which the cut-out operates, repeating the process to validate consistency. Ideally, this value should fall between 95.0 and 97.5mA.

If the trip current deviates from the specified range, adjust the trip current relay circuit. Newer testers typically feature a small adjustable resistor on the circuit board for this purpose, while older models may utilize a Sigma relay with an accessible screw head for adjustment.

Voltmeter Calibration:

Connect a traceable high-voltage voltmeter to the output leads and compare its reading with that of the internal voltmeter. Employing an electrostatic voltmeter is recommended for this comparison.

IMPORTANT: Do not replace the plastic screw in a retractable high-voltage probe with a metal screw under any circumstances!

WARNING: Never substitute any part or component with one that is not specified by Criterion Instruments.

Fuse Replacement

The fuse used should be a type MDL-3A (or MDX-3A) with a SLO-BLO characteristic. Ordinary fuses must not be used. Avoid over fusing. If the fuse blows repeatedly without apparent cause, promptly return the instrument for repair as it may be faulty.

WARNING: Always disconnect equipment from electrical power before removing a fuse; not doing so may result in serious injury.

1. Disconnect the device from the electrical system.
2. Unscrew the fuse holder cap to access the fuse.
3. Examine the fuse. If there is a visible gap in the wire or a dark or metallic smear inside the glass, the fuse is blown and needs replacement. If unable to determine if the fuse is blown, proceed to steps 4 and 5. If the fuse is confirmed to be blown, proceed to step 6.
4. Set a multimeter to the resistance or Ω (ohms) setting.
5. Place one of the multimeter leads on one end of the fuse and the other lead on the opposite end. A reading between 0 and 5Ω (ohms) indicates a good fuse. A higher reading suggests a faulty or degraded fuse. A reading of "OL" (Over Limit) indicates a blown fuse.
6. If the fuse is blown, replace it with one that is identical.
7. Screw the fuse holder cap back into place.

Applications

- Control panels
- Transformers
- Electrical motors
- Home appliances
- Lighting fixtures
- Electrical cables
- Components

Appendix

The following brief notes aim to describe some characteristics of dielectric strength testing to help the operator better understand its significance. Specific test voltages or currents are typically outlined in testing specifications established by organizations like CSA or UL.

What is dielectric strength?

Dielectric strength refers to the voltage rating at which electrical failure or breakdown occurs. It is influenced by factors such as the frequency of the applied voltage, temperature, surrounding medium, and the method of voltage application.

Is this breakdown considered destructive?

The standard CSA test, applicable to most appliances and small equipment, requires a current of 95mA. This breakdown is intended to be destructive to pinpoint the failure point and determine the reason for the failure. For certain applications, a lower current, such as 5mA, may be specified, which likely won't be destructive.

Should the test voltage be AC or DC?

The regulatory authority will specify which to use in a particular circumstance. AC is commonly used, but it's essential to remember that the capacitance to ground of large motors or transformers can cause significant current flow. For instance, at 2500V, 60Hz, with a capacitance of 0.01uF, the reactive current will be 9.4mA. This issue doesn't arise with DC, but voltage must be applied gradually.

What is the distinction between trip current and current limit?

The "current limit" is the maximum current the high-voltage power supply can provide. The "trip current" is the current value at which the internal circuit breaker will shut off the high voltage and indicate a failure. Clearly, the "current limit" must exceed the "trip current" for failure detection. The "trip current" is often adjustable.

continued...

What is the relationship between dielectric strength, insulation resistance, and leakage current?

Insulation resistance is typically measured with DC at a voltage much lower than the breakdown voltage. Its value depends on material characteristics and surface conditions such as dirt or moisture. The measured insulation resistance may vary with voltage and time, but not rapidly. As voltage increases, dielectric breakdown leads to a significant and rapid increase in current.

Leakage current, defined by CSA and ANSI, is the current flowing "from the power supply of equipment to exposed non-current-carrying parts, and thence to ground." It's primarily influenced by insulation resistance but also by any existing capacitance, intentional or otherwise.

Sometimes, it's necessary to independently conduct all three tests on a piece of equipment.

Product Warranty

Criterion Instruments guarantees this system to be free of defects in material or workmanship for a period of two (2) years from date of shipment. During the warranty period, Criterion Instruments will repair or replace, at no charge, products or parts of a product that proves to be defective because of improper material or workmanship, under normal use and maintenance. Criterion Instruments total liability is limited to repair or replacement of the product. Criterion Instruments shall not be liable for damages to goods, property, or persons due to improper use or through attempts to utilize the instrument under conditions which exceed the designed capabilities. In order to begin the warranty service process, please contact us by phone at 1-800-268-6886 or by email at info@criterioninstr.com. To discuss the claim and determine the appropriate steps to process the warranty.

Product Disposal and Recycling

Please follow local laws and regulations when disposing or recycling the system. Your product contains electronic components and must be disposed of separately from standard waste products.

Product Support

If you have any questions on your product, please contact your authorized Criterion Instruments distributor or our Customer Service team by phone at 1-800-268-6886 or by email at info@criterioninstr.com.

Please visit www.criterioninstr.com for
the most up-to-date manuals and datasheets.

Product specifications subject to change without notice. All rights reserved. Any unauthorized copying or reproduction of this manual is strictly prohibited without prior written permission from Criterion Instruments.

CRITERION INSTRUMENTS

Unparalleled precision and reliability in dielectric strength testing

MADE IN CANADA

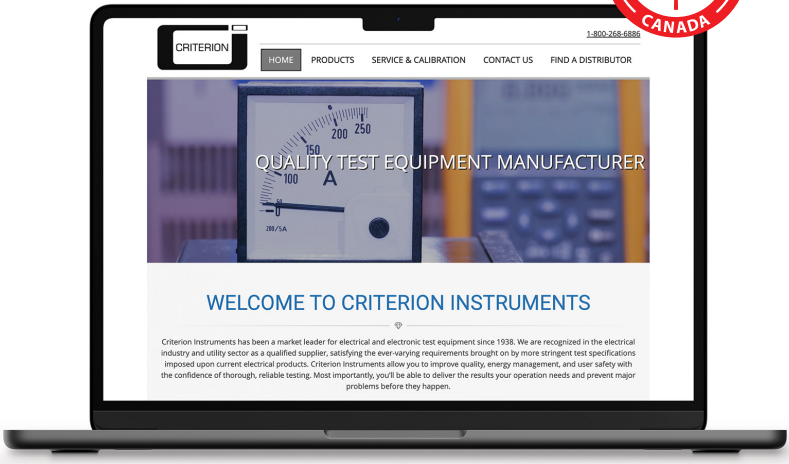

www.criterioninstr.com

1.888.610.7664 www.calcert.com sales@calcert.com