Additel

Metrology Made Simple

ADT673
Calibration Manual

ADT673 Calibration Manual

1.0 – Scope

The Additel ADT673 series are advanced digital pressure devices with an easy to read/use color touchscreen display. These units are fully temperature compensated, have a built-in barometer sensor, and are durable IP67 rated devices. They excel in all aspects of performance, durability and reliability. Additional features include data logging, Wi-Fi communication, and HART functionality. Please read this document carefully before attempting to perform any type of verification or adjustment. Also ensure that the operator has the metrological expertise and equipment to perform the work.

2.0 – References

- Additel 686 and 673 Series Digital Pressure Gauge User Manual
- Additel 773, 783, and 793 User Manual
- Additel 151 Digital Pressure Module Datasheet
- Additel 161 Intelligent Digital Pressure Modules Datasheet
- Additel 286 Multifunction Reference Thermometer Readout User Manual

3.0 – Recommended Equipment and Specifications

Equipment	Specifications	Recommended Model/ Item Number/Description
Pressure Controller	Applicable to the ADT673 pressure ranges	ADT773, ADT783, ADT793
Reference Standard Modules	Applicable to the ADT673 pressure ranges	ADT151, ADT161
Manifolds	Applicable to the ADT673 pressure ranges	ADT121, ADT123
Hoses	Applicable to the ADT673 pressure ranges	ADT100-HTK's, silicone tube, Festo tube, etc.
Connection Cables	USB cable type A to type C USB cable type A to RS232	9052 9050
Multifunction Calibrator	Applicable to the ADT673 electrical ranges	-
Readout Device / Multimeter	Applicable to the ADT673 electrical ranges	ADT286

Additel
1.888.610.7664 www.calcert.com sales@calcert.com

4.0 – Environmental Conditions

- Ideal Temperature and Humidity Conditions:
  - 23 ± 5°C with less than 80% relative humidity

5.0 – Diagrams and Descriptions

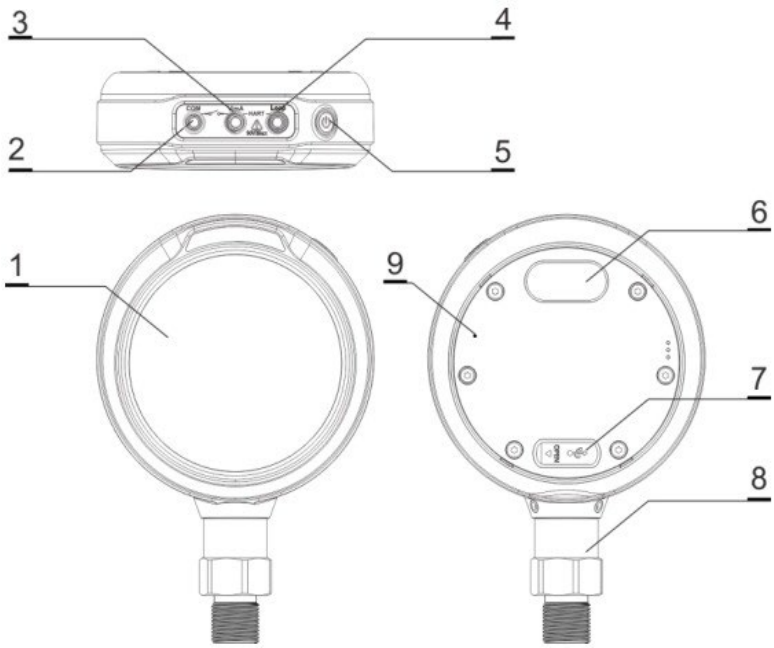

Diagram 5.1
(see chart below)

Diagram 5.2
(6 – BP inlet port)

No.	Introduction	Comment
1	LCD	
2	COM	ADT673 only, common, black
3	V/mA/SW	ADT673 only, voltage/circuit/switch measurement input, red and white
4	Loop	ADT673 only, DC power output, red
5	Power	Short press to turn on, press and hold for 2 seconds to turn off, short press to take a screenshot when it is turned on.
6	External module	If needed, RS232 module and WIFI module are available
7	USB TYPE-C	Communication or power supply
8	Pressure module	
9	Pressure inlet	Visible only after removing the back cover(with ATM mark), it is used for air connection of the barometric calibration

Additel
1.888.610.7664 www.calcert.com sales@calcert.com

6.0 – Calibration Procedure

6.1 – Date & Time

1) Turn on the gauge by pressing the **Power button** located at the top of the unit.
2) Press the **Menu icon** at the bottom of the display to open up the options menu.
3) Press the **Setup icon** to enter the system settings interface.
4) Press the **Personalization icon** on the left side of the display.
5) Press **Date & Time** to view the following parameters: Time, Date, Date Format, Date Separator, 24-Hour Time, and Time Zone.
6) If necessary, use the touchscreen display to adjust any of the Date & Time parameters.
7) Press the **Menu icon** twice to return to the main pressure display.

6.2 – Gauge Exercise & Zero

6.2.1 – Exercise

1) Connect the unit to the appropriate pressure system and ensure that all connections are sealed to prevent any pressure leakage.
    - NOTE: Please ensure that all equipment is rated to handle the maximum pressure of the unit under test.
2) Pressurize the system to the lower limit range of the unit and allow it to stabilize for a sufficient amount of time. Additel typically allows 60 seconds of stabilization time.
3) Pressurize the system to the upper limit range of the unit and allow it to stabilize for a sufficient amount of time.
4) Repeat the lower and upper limit exercise for an additional two cycles then vent the system when done.

Additel
1.888.610.7664 www.calcert.com sales@calcert.com

6.2.2 – Zero

1) Vent the system for a sufficient amount of time to allow any trapped gas to escape.
2) Press the **Zero icon** next to the pressure value on the main display to manually zero the unit before pressure verification.
    - The unit should not be zeroed when in absolute pressure mode because doing so will add an offset to the test values.

6.3 – Pressure Verification

1) Connect the Unit Under Test - UUT (ADT673) to the appropriate pressure system.
2) Ensure that the correct reference standards are being used for an acceptable TUR and the system is sealed properly in order to prevent any leakage.
3) Determine the test points for the appropriate range.
    - **Gauge pressure – GP** typically has 9 test points:

      (0%, 25%, 50%, 75%, 100%, 75%, 50%, 25%, 0%) max range,

      Example: GP100 test points are (0, 25, 50, 75, 100, 75, 50, 25, 0) psi
    - **Compound Pressure – CP** typically has 11 test points:

      (-13psi, -7.25psi, 0%, 25%, 50%, 75%, 100%, 75%, 50%, 25%, 0%) max range,

      Example: CP100 test points are (-13, -7.25, 0, 25, 50, 75, 100, 75, 50, 25, 0) psi
    - **Differential pressure – DP** typically has 9 test points:

      (-100%, -75%, -50%, -25%, 0%, 25%, 50%, 75%, 100%) max range

      Example: DP100 test points are (-100, -75, -50, -25, 0, 25, 50, 75, 100) inH20
4) Source the correct amount of pressure for each test point.
5) Allow appropriate time for each test point to stabilize and record each measured value.

Additel
1.888.610.7664 www.calcert.com sales@calcert.com

6) Compare the reference and UUT test values. Additel recommends maintaining less than 50% tolerance limit.

6.4 – Calibration Adjustment

1) Press the **Menu icon** at the bottom of the display to open up the options menu.
2) Press the **Setup icon** to enter the system settings interface.
3) Press the **Service icon** at the left of the display.
4) Press **Calibration** and input the password as 123456. Press the **Check icon** to confirm.
5) Press **Pressure Module Calibration** to view the calibration options.
6) The unit has either 3 or 2 calibration points depending on the range.
    - CP and DP ranges have 3 calibration points: lower limit, zero, and upper limit
    - GP ranges have 2 calibration points: lower limit and upper limit
7) Press **Multi-point calibration** to view whether or not any previous calibration has been performed on the unit. If so, there would be values under References and Measurements as well as a date of the previous calibration. If not, these values and the date would be blank.
8) Press the **Play icon** at the bottom of the display to begin the calibration procedure.
9) The display will show three columns: Calibration Points, References and Measurements.
10) The lower limit row will be highlighted. If necessary, adjust the Calibration and Reference points for the lower limit using the touchscreen display.
11) Source the lower limit pressure and allow enough time to stabilize. Press the **Right arrow** to confirm the lower limit calibration.
12) The upper limit row will now be highlighted. If necessary, adjust the Calibration and Reference points for the upper limit using the touchscreen display.

Additel
1.888.610.7664 www.calcert.com sales@calcert.com

13) Source the upper limit pressure and allow enough time to stabilize. Press the **Right arrow** to confirm the upper limit calibration.

14) Press the **Save icon** at the bottom of the display to save the calibration data.

15) Use the **Back and Menu icons** to return to the main pressure display.

16) Repeat the Zero procedure (6.2.2).

17) Repeat the Pressure Verification (6.3).

6.5 – Barometer Verification

1) Remove the gauge back panel and connect the unit's atmosphere - ATM port to the appropriate barometer pressure system using a blue Festo hose (4mm).
2) Determine the test points for barometric pressure – BP testing. Additel typically uses 4 test points for BP testing: (60, 80, 100, 110) kPa.a
3) Source the correct amount of pressure for each test point.
4) Allow appropriate time for each test point to stabilize and record each measured value. Additel sets the barometric test tolerance at ± 55Pa.
5) Compare the reference and UUT test values. Additel recommends maintaining less than 50% tolerance limit.

Additel
1.888.610.7664 www.calcert.com sales@calcert.com

6.6 – Barometer Calibration

1) Press the **Menu icon** at the bottom of the display to open up the options menu.
2) Press the **Setup icon** to enter the system settings interface.
3) Press the **Service icon** at the left of the display.
4) Press **Calibration** and input the password as 123456. Press the **Check icon** to confirm.
5) Press **Atmospheric Module Calibration** to view the calibration options.
6) Barometer typically has two calibration points: 60kPa.a for the lower limit and 110kPa.a for the upper limit.
7) Press **Two-point calibration** to view whether or not any previous calibration has been performed on the unit.
8) Press the **Play icon** at the bottom of the display to begin the calibration procedure.
9) The display will show three columns: Calibration Points, References and Measurements.
10) The lower limit row will be highlighted. If necessary, adjust the Calibration and Reference points for the lower limit using the touchscreen display.
11) Source the lower limit pressure and allow enough time to stabilize. Press the **Right arrow** to confirm the lower limit calibration.
12) The upper limit row will now be highlighted. If necessary, adjust the Calibration and Reference points for the upper limit using the touchscreen display.
13) Source the upper limit pressure and allow enough time to stabilize. Press the **Right arrow** to confirm the upper limit calibration.
14) Press the **Save icon** at the bottom of the display to save the calibration data.
15) Use the **Back and Menu icons** to return to the main pressure display.
16) Vent the system and repeat the Barometer verification (6.5).

Additel
1.888.610.7664 www.calcert.com sales@calcert.com

6.7 – Electrical Verification

1) Connect the UUT (ADT673) to the appropriate electrical system. Ensure that the wires are plugged in correctly to test DC Voltage, DC Current or 24V DC Output.
2) Determine the test points for each type of electrical test.
   - **DC Voltage** typically has 7 test points: (-30, -10, -5, 0, 5, 10, 30) V
   - **DC Current** typically has 7 test points: (-30, -10, -5, 0, 5, 10, 30) mA
   - **24V DC Output** typically has 1 test points: 24V
3) When testing DC Voltage or DC Current, zero the unit by pressing the **Zero icon** next to the electrical value on the main display.
4) Source the correct amount of voltage or current for each test point.
5) Allow appropriate time for each test point to stabilize and record each measured value.
6) Compare the reference and UUT test values. Additel recommends maintaining less than 50% tolerance limit.

6.8 – Electrical Calibration

1) Press the **Menu icon** at the bottom of the display to open up the options menu.
2) Press the **Setup icon** to enter the system settings interface.
3) Press the **Service icon** at the left of the display.
4) Press **Calibration** and input the password as 123456. Press the **Check icon** to confirm.
5) Press **(-30~30) mA** to view the calibration options for current. Ensure that the electrical system is wired to test DC Current.
6) Press **Multi-point calibration** to view whether or not any previous calibration has been performed on the unit.
7) Press the **Play icon** at the bottom of the display to begin the calibration procedure.

Additel
1.888.610.7664 www.calcert.com sales@calcert.com

8) DC Current has 5 calibration points: (-30, -15, 0, 15, 30) mA

9) For each highlighted point, source the appropriate amount of current and allow enough time to stabilize. Press the **Right arrow** to confirm each calibration point.

10) After confirming the 5th calibration point, press the **Save icon** at the bottom of the display to save the calibration data.

11) Press the **Back icon** to return to the Calibration menu.

12) Press **(-30~30) V** to view the calibration options for voltage. Ensure that the electrical system is wired to test DC Voltage.

13) Press **Multi-point calibration** to view whether or not any previous calibration has been performed on the gauge.

14) Press the **Play icon** at the bottom of the display to begin the calibration procedure.

15) DC Voltage has 5 calibration points: (-30, -15, 0, 15, 30)V

16) For each highlighted point, source the appropriate amount of voltage and allow enough time to stabilize. Press the **Right arrow** to confirm each calibration point.

17) After confirming the 5th calibration point, press the **Save icon** at the bottom of the display to save the calibration data.

18) Use the **Back and Menu icons** to return to the main electrical display.

19) Repeat the Electrical Verification (6.6).

Additel
1.888.610.7664 www.calcert.com sales@calcert.com