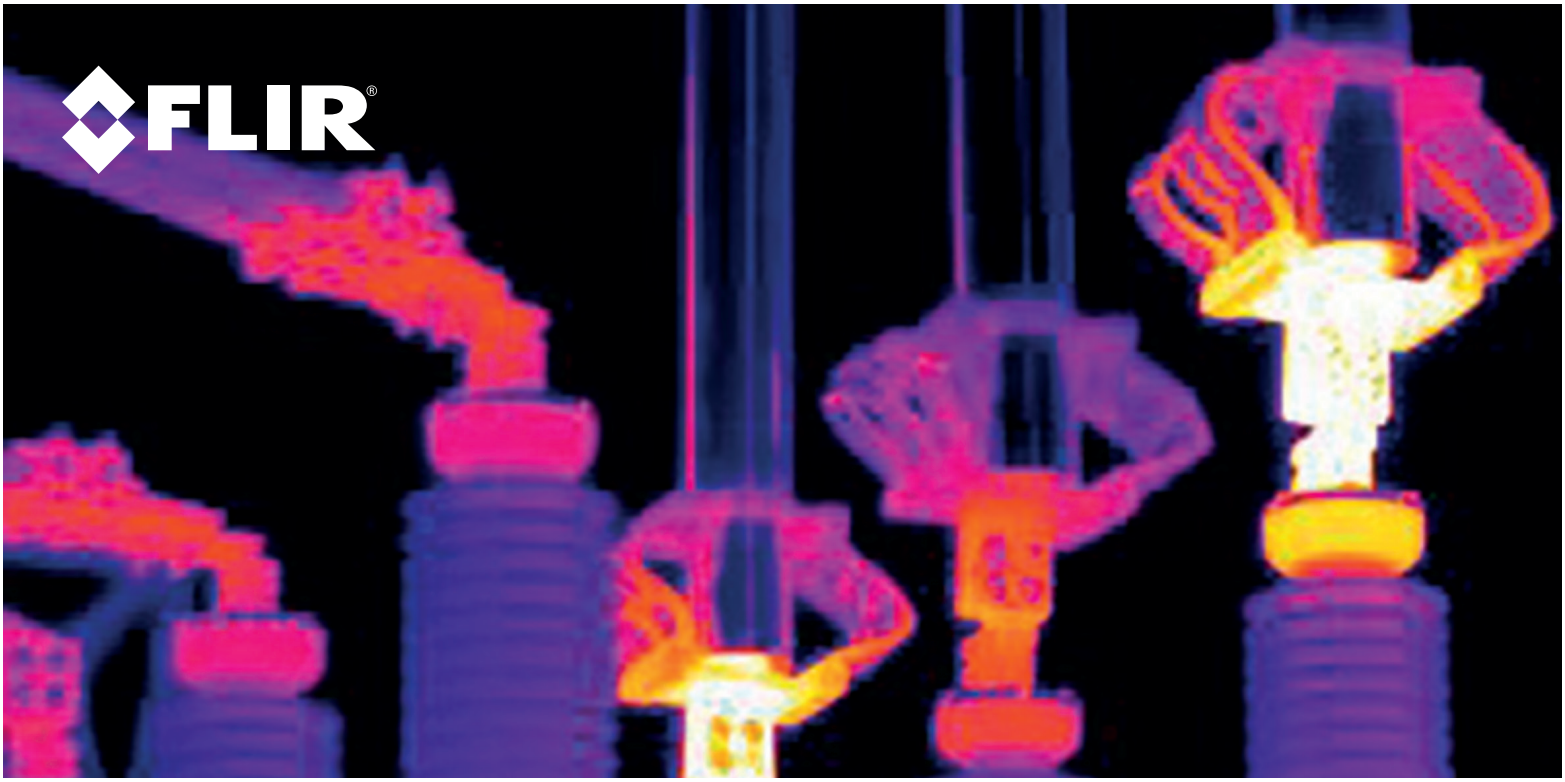

APPLICATION STORY

THE ADVANTAGES OF FIXED MOUNT THERMAL IMAGING CAMERAS FOR POWER SUBSTATION MONITORING

Fixed-mount thermal imaging cameras provide utilities with a reliable way to continuously monitor power substations and detect early signs of equipment failure. By capturing temperature data around the clock, these systems reveal hidden issues such as increased electrical resistance, loose connections, and insulation breakdown before they escalate into costly outages or safety risks.

A500f/A700f Advanced Smart Sensor
Fixed-Mount Thermal Imaging Camera for Condition Monitoring and Early Fire Detection

Power substations are critical nodes in the electrical grid, and their reliability depends on the health of high-voltage equipment operating under constant electrical and environmental stress. As infrastructure ages and demand increases, utilities face growing pressure to prevent failures that can lead to outages, costly repairs, and safety risks.

The solution is the use of fixed-mount thermal imaging cameras. These infrared-sensing cameras offer a proven way to continuously monitor substation assets and detect problems before they escalate into unplanned downtime.

Why Continuous Thermal Monitoring Matters

Electrical resistance is a leading cause of equipment degradation in substations. Corrosion, loose connections, insulation breakdown, and mechanical wear can all increase resistance, causing components to heat up as current flows through them. These temperature increases are often the earliest indicators of developing faults, but they are not visible to the

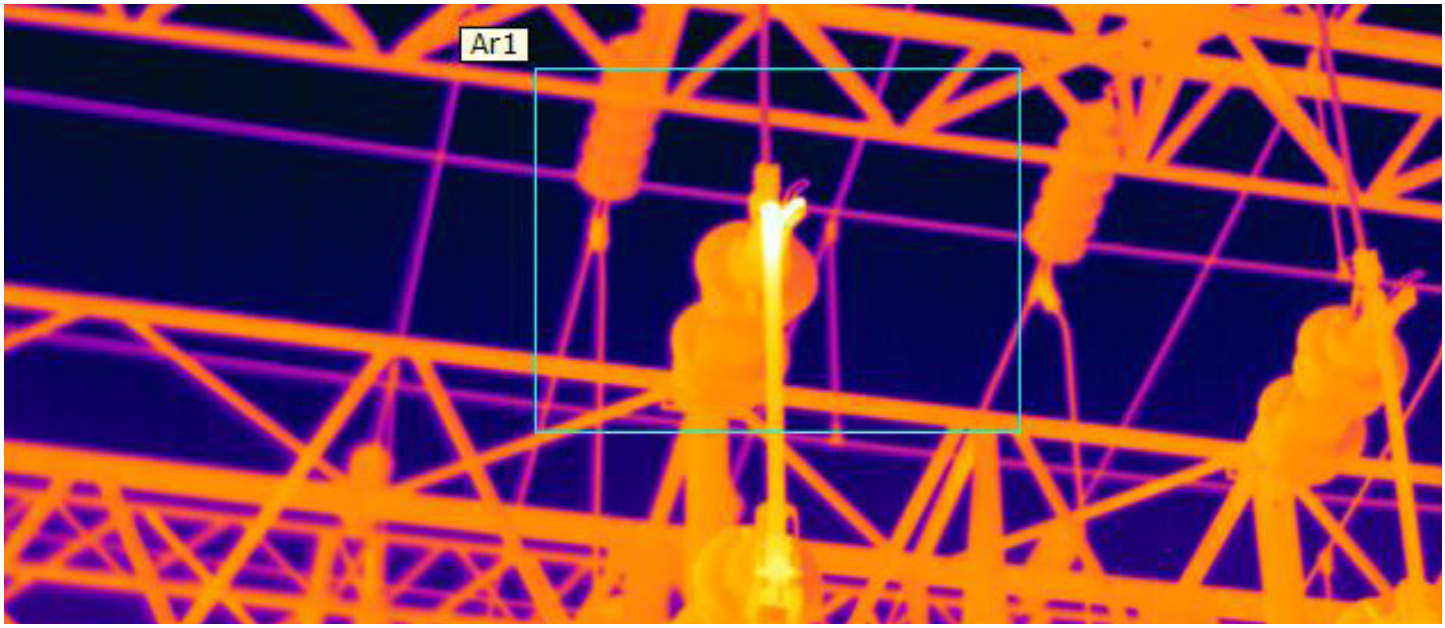

naked eye.

Thermal imaging allows utilities to “see” these hidden issues by detecting abnormal heat patterns across critical assets. When installed and set up to continuously monitor those assets, thermal cameras can detect problems that could otherwise go unnoticed between inspections.

From Spot Checks to 24/7 Visibility

A fixed-mount thermal imaging system captures temperature data around the clock, creating a continuous thermal profile of the substation. Instead of relying on a single snapshot in time, utilities gain access to historical data that can be analyzed for trends and anomalies. This data allows maintenance teams to identify gradual temperature increases that signal deteriorating conditions. They can prioritize repairs, plan outages more effectively, and avoid unnecessary work on healthy equipment.

Monitoring Critical Substation Assets

Fixed-mount thermal cameras are commonly used to monitor assets that are most prone to failure, including power transformers, circuit breakers, bushings, arrestors, disconnectors, and high-voltage lines. These components tend to heat up before failing, making thermal imaging an effective early-warning tool.

And early warning can be critical: A single substation fault can trigger widespread outages affecting businesses, communications, transportation systems, and critical services. Continuous thermal monitoring—especially of similar components operating under similar conditions—helps utilities distinguish genuine faults from normal operations, so maintenance teams know when to respond to developing issues, and can act before problems reach that point, reducing the risk of blackouts and

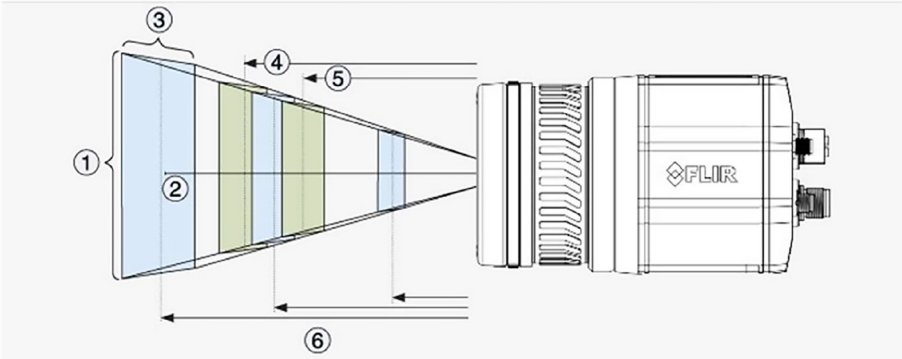

1. Vertical field of view in meters and feet.
2. Instantaneous field of view in mm and in.
3. Horizontal field of view in meters and feet.
4. Depth of field far limit in meters and feet.
5. Depth of field near limit in meters and feet.
6. Distance to target in meters and feet.

D	0.50	1.00	2.00	5.00	10.00	25.00	50.00	100.00	m
HFOV	-	-	-	0.56	1.13	2.82	5.63	11.27	m
VFOV	-	-	-	0.42	0.85	2.11	4.23	8.45	m
DOF near	-	-	-	4.79	9.19	20.5	34.8	53.4	m
DOF far	-	-	-	5.23	11.0	32.0	88.6	770.4	m
IFOV	-	-	-	1.21	2.43	6.07	12.14	24.29	mm

brownouts.

Flexible System Design for Complex Environments

Substations vary widely in size, layout, and asset density, which is why flexibility is essential. Fixed-mount thermal cameras can be installed in a variety of configurations, including fixed positions, pan-tilt units, or a combination of both. Telephoto lenses allow cameras mounted on existing structures, such as gantries, to monitor large areas from a safe distance.

Many systems also combine thermal and visual imaging, giving operators additional context when assessing alarms or investigating anomalies. Integrated software collects live video and temperature data over IP networks, stores historical information, and generates alarms, trends, and reports. This enables remote monitoring from a control room or other centralized location.

Improving Safety and Reducing Costs

Fixed-mount thermal imaging also improves worker safety by reducing the need for frequent manual inspections in high-voltage environments. With cameras continuously watching critical assets, personnel can focus on targeted maintenance activities rather than routine inspection rounds.

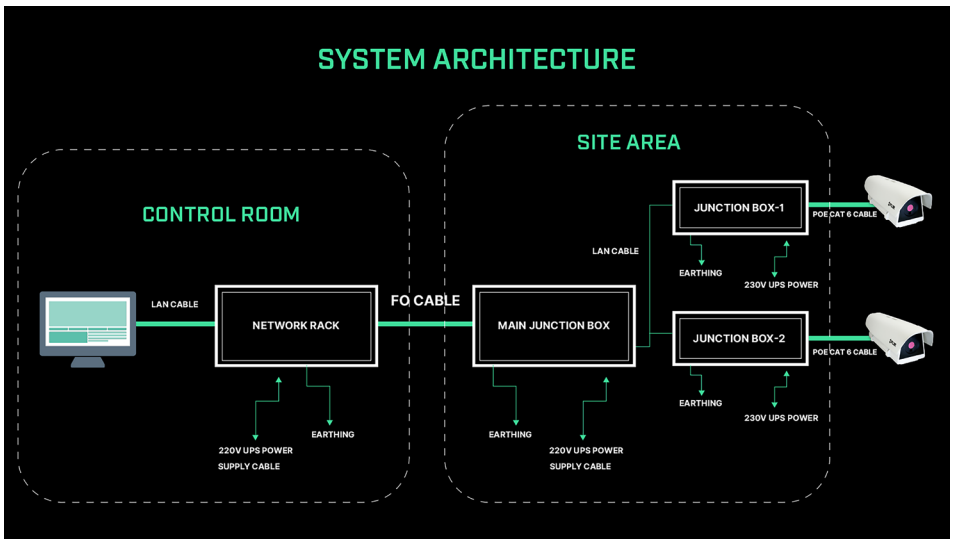

At the same time, fewer unexpected failures translate into lower repair costs, reduced downtime, and improved asset life. Over time, these benefits contribute to more reliable power delivery and lower total cost of ownership for substation infrastructure

A Smarter Approach to Substation Reliability

For utilities and power companies looking to modernize their maintenance strategies, fixed-mount thermal imaging cameras offer a practical, data-driven solution. By providing continuous visibility into the thermal condition of critical assets, these systems help companies detect issues earlier, plan maintenance more effectively, and protect both people and infrastructure.

In an environment where reliability is non-negotiable, continuous thermal monitoring has become an essential tool for keeping substations—and the grid they support—running safely and efficiently.

To install solutions like these at your own business, learn more or contact an expert from our partner Hi-Tech.

To learn more about solutions for substation monitoring, please visit.

Specifications are subject to change without notice.

©Copyright 2026, Teledyne FLIR, LLC.

All other brand and product names are trademarks of their respective owners. The images displayed may not be representative of the actual resolution of the camera shown. Images for illustrative purposes only.

Revised: 5/21/2026, 5 x Automation application notes_substation monitoring 26-0374-INS

1.888.610.7664 www.calcert.com sales@calcert.com