Digester Gas Monitor
Operator's Manual

Part Number: 71-0266RK

Revision: Q

Released: 2/10/21

1.888.610.7664 www.calcert.com sales@calcert.com

WARNING

Read and understand this instruction manual before operating detector. Improper use of the detector could result in bodily harm or death.

Periodic calibration and maintenance of the detector is essential for proper operation and correct readings. Please calibrate and maintain this detector regularly! Frequency of calibration depends upon the type of use you have and the sensor types. Typical calibration frequencies for most applications are between 3 and 6 months, but can be required more often or less often based on your usage.

1.888.610.7664 www.calcert.com sales@calcert.com

Product Warranty

RKI Instruments, Inc. warrants gas alarm equipment sold by us to be free from defects in materials, workmanship, and performance for a period of one year from date of shipment from RKI Instruments, Inc. Any parts found defective within that period will be repaired or replaced, at our option, free of charge. This warranty does not apply to those items, which by their nature, are subject to deterioration or consumption in normal service, and which must be cleaned, repaired, or replaced on a routine basis. Examples of such items are as follows:

a) Absorbent cartridges

b) Pump diaphragms and valves

c) Fuses

d) Batteries

e) Filter elements

Warranty is voided by abuse including mechanical damage, alteration, rough handling, or repair procedures not in accordance with the operator's manual. This warranty indicates the full extent of our liability, and we are not responsible for removal or replacement costs, local repair costs, transportation costs, or contingent expenses incurred without our prior approval.

THIS WARRANTY IS EXPRESSLY IN LIEU OF ANY AND ALL OTHER WARRANTIES AND REPRESENTATIONS, EXPRESSED OR IMPLIED, AND ALL OTHER OBLIGATIONS OR LIABILITIES ON THE PART OF RKI INSTRUMENTS, INC., INCLUDING BUT NOT LIMITED TO, THE WARRANTY OF MERCHANTABILITY OR FITNESS FOR A PARTICULAR PURPOSE. IN NO EVENT SHALL RKI INSTRUMENTS, INC. BE LIABLE FOR INDIRECT, INCIDENTAL, OR CONSEQUENTIAL LOSS OR DAMAGE OF ANY KIND CONNECTED WITH THE USE OF ITS PRODUCTS OR FAILURE OF ITS PRODUCTS TO FUNCTION OR OPERATE PROPERLY.

This warranty covers instruments and parts sold to users by authorized distributors, dealers, and representatives as appointed by RKI Instruments, Inc.

We do not assume indemnification for any accident or damage caused by the operation of this gas monitor, and our warranty is limited to the replacement of parts or our complete goods.

1.888.610.7664 www.calcert.com sales@calcert.com

Table of Contents

Chapter 1: Introduction 7

Overview 7
About the Digester Gas Monitor 7
About this Manual 7
Specifications 9

Chapter 2: Description 11

Overview 11
External Description 11
Housing 11
Reset Switch 11
Buzzer 12
Inlet and Exhaust Fittings 12
Internal Description 14
Display PCB 16
Main PCB 18
Relays 20
Termination Jumper 21
Ground Jumper 21
Ground Stud 21
Power Switch. 21
Power Supply 21
Fuses 21
Flow Regulator and Gauge. 21
Sample Regulator 22
Flow Switch. 22
Flow Block 22
Sensors 22
Flowmeters 23
Hydrophobic Filter 23
Water Trap. 23
Dryer 23
Solenoid Valves 23
Check Valves 24
Factory Wiring 25
Optional Horn/Strobe 26

Chapter 3: Installation and Start Up 29

Overview 29
Mounting the Digester Gas Monitor 29

1.888.610.7664 www.calcert.com sales@calcert.com

Wiring the Digester Gas Monitor 30
Connecting the AC Power Source *32*
Connecting the DC Power Source *33*
RS-485 Modbus Wiring *34*
Connecting External Alarms *34*
Connecting Recorders *35*
Making Fitting Connections. 36
Compression Fitting Connections *36*
Hose Barb Connections *40*
Starting Up the Digester Gas Monitor 40
Adjusting the Flow Rates *42*

Chapter 4: Operation 43

Overview 43
Normal Operation 43
Detection Cycle *43*
4 - 20 mA Signal Output Operation 46
Viewing and Resetting Min/Max Readings 46
Battery Charging (Optional) 47
Alarm Indications 47
Alarm 1 Condition *49*
Alarm 2 Condition *50*
Alarm 3 Condition *51*
Fail Condition *52*
Flow Fail Condition *52*
Low DC Power Condition *53*

Chapter 5: Global Menu 55

Overview 55
Viewing and Changing Global Parameters 55

Chapter 6: Configuration Menu 59

Overview 59
Viewing and Changing Channel Parameters 59

Chapter 7: Input Setup Menu 65

Overview 65
Selecting the Detector Head Input Type and Gas Setup 65

Chapter 8: Calibration Mode 69

Overview 69
Calibration Frequency 69
Entering Calibration Mode 70
Calibration Timeout Setting 70

1.888.610.7664 www.calcert.com sales@calcert.com

Performing a Calibration 71
Performing a Fresh Air Adjustment *72*
Performing a Gas Adjustment *73*
Viewing Maximum Spans 75

Chapter 9: RS-485 Modbus Output 76

Overview 76
Wiring the Digester Gas Monitor in a Modbus System 76
Ground Jumper *76*
Recommended Modbus Wiring *77*
Termination Jumper *78*
Using the Digester Gas Monitor in a 4-wire Modbus System 79
Modbus Menu 79
Supported Modbus Functions 80

Chapter 10: Maintenance 85

Overview 85
Preventive Maintenance 85
Troubleshooting 86
Sensor Replacement 89
Replacing the Methane Sensor *89*
Replacing the Oxygen Sensor *90*
Replacing the H_2S Sensor *90*
Replacing the CO_2 Sensor *91*
Replacing the Particle Filter 92
Replacing the Hydrophobic Filter 93
Replacing the Oil Mist Filter 96
Replacing the Internal and External Water Traps' Filter Element 98
Replacing the Internal Water Trap 99
Replacing the External Water Trap 104
Replacing the Fuses 106
Parts List 108

1.888.610.7664 www.calcert.com sales@calcert.com

Chapter 1: Introduction

Overview

This chapter briefly describes the Digester Gas Monitor. This chapter also describes the *Digester Gas Monitor Operator's Manual* (this document). Table 1 at the end of this chapter lists the specifications for the Digester Gas Monitor.

About the Digester Gas Monitor

The Digester Gas Monitor is a fixed-mounted, four channel gas monitor that detects methane, oxygen, carbon dioxide, and hydrogen sulfide. All four sensors may not be installed in all versions of the Digester Gas Monitor. Gas readings and other messages are indicated on an LCD display. All user adjustable parameters may be accessed using the control switches on the display PCB.

The Digester Gas Monitor is designed to monitor digester conditions in a corrosive environment with high humidity and high levels of H_2S. It requires compressed air to draw in sample.

The Digester Gas Monitor includes audible and visual alarms that warn you of hazardous gas conditions. The alarm circuits include up to three levels of gas alarms. The fail circuit alerts you to failures in the Digester Gas Monitor.

The Digester Gas Monitor has two modes of operation. They are Normal Operation during which all samples are taken and Calibration Mode that enables you to calibrate the Digester Gas Monitor's active channels. It also has four selection menus that allow you to configure various Digester Gas Monitor channel and instrument parameters: the Global Menu, Configuration Menu, Input Setup Menu, and Modbus Menu.

About this Manual

The *Digester Gas Monitor Operator's Manual* is organized as follows:

- **Chapter 1** is an introduction to the Digester Gas Monitor.
- **Chapter 2** describes the components of the Digester Gas Monitor.
- **Chapter 3** describes the installation and start-up procedures of the Digester Gas Monitor.
- **Chapter 4** describes the operation of the Digester Gas Monitor.
- **Chapter 5** describes the Global Menu which allows you to set instrument parameters.
- **Chapter 6** describes the Configuration Menu which allows you to set channel parameters.
- **Chapter 7** describes the Input Setup Menu which allows you to set the input type for each channel.
- **Chapter 8** describes Calibration Mode which allows you to calibrate the Digester Gas Monitor's active channels.
- **Chapter 9** describes the Digester Gas Monitor's RS-485 Modbus output.
- **Chapter 10** describes the Digester Gas Monitor's maintenance requirements and procedures.

1.888.610.7664 www.calcert.com sales@calcert.com

The *Digester Gas Monitor Operator's Manual* uses the following conventions for notes, cautions, and warnings:

NOTE: Describes additional or critical information.

CAUTION: *Describes potential damage to equipment.*

WARNING: Describes potential danger that can result in injury or death.

⚠ Caution: refer to accompanying documentation

~ Vac (AC voltage)

⎓ Vdc (DC voltage)

1.888.610.7664 www.calcert.com sales@calcert.com

Specifications

Table 1 lists specifications for the Digester Gas Monitor.

Table 1: Digester Gas Monitor Specifications

Description	Specification						
Detection Range	**Methane (CH_4)**	**Oxygen (O_2)**	**Carbon Dioxide (CO_2)**	**Hydrogen Sulfide (H_2S)**			
	0 - 100% volume	0 - 25% volume	0 - 50% volume	0 - 500 ppm	0 - 1000 ppm	0 - 3000 ppm	0 - 5000 ppm
Resolution	1% volume	0.1% volume	0.1% volume	1 ppm	5 ppm	10 ppm	20 ppm
Alarm Points	**Alarm 1:** 100% volume **Alarm 2:** 100% volume **Alarm 3:** 100% volume	**Alarm 1:** 4% volume (increasing) **Alarm 2:** 25% volume (increasing) **Alarm 3:** 25% volume (increasing)	**Alarm 1:** 50% volume **Alarm 2:** 50% volume **Alarm 3:** 50% volume	**Alarm 1:** 500 ppm **Alarm 2:** 500 ppm **Alarm 3:** 500 ppm	**Alarm 1:** 1000 ppm **Alarm 2:** 1000 ppm **Alarm 3:** 1000 ppm	**Alarm 1:** 3000 ppm **Alarm 2:** 3000 ppm **Alarm 3:** 3000 ppm	**Alarm 1:** 5000 ppm **Alarm 2:** 5000 ppm **Alarm 3:** 5000 ppm
NOTE: There are different versions of the Digester Gas Monitor. Some versions may not have all four gas sensors installed.							
Input Power	100/115/220V ~ ±10%, 50/60Hz, 1.0/1.0/0.5A **or** 24 V ⎓ ± 10%, 2.5A						
Maximum Compressed Air Sample Pressure	140 psi						
Minimum Flow Regulator Output psi Required	**No Sample Lines Connected:** Flow regulator output set to 25 psi **Maximum Recommended Sample Lines Connected:** Flow regulator output set to 45 psi						
Sample Inlet Requirements	Sample inlet pressure must be less than 150 psi. If your sample inlet pressure is higher than that, you must regulate it down.						
Recommended Sample Flow Rate	3.0 SCFH						
Compressed Air Usage	63 liters dry compressed air maximum per detection cycle						
Recommended Minimum Compressor Size	3 gallon, 100 psi						

1.888.610.7664 www.calcert.com sales@calcert.com

Table 1: Digester Gas Monitor Specifications

Construction (housing)	Fiberglass/polyester with lexan window (NEMA 4X)
Dimensions	33.79 in. H x 24.09 in. W x 13.50 in. D (85.83 cm H x 61.19 cm W x 34.29 cm D)
Weight	45 lbs. (including horn/strobe)
Environmental Conditions	• For indoor or outdoor locations (Type 4X) • 0°C to 40°C (32°F to 104°F) max. ambient • Maximum humidity of 95% relative
User Controls	• Reset switch • Control switches: ESCAPE, UP/YES, DOWN /NO, and ENTER • Flow regulator output knob • H_2S Dilution Air and H_2S Dilution Sample flowmeter valves
Relays	• Relay contacts rated for 10A @ 115/220V~ resistive or 10A @ 30V ⎓ resistive • SPDT, Form C (common, normally open, and normally closed contacts)
Standard Accessory	Operator's manual (this document)
Optional Accessory	Horn/strobe

WARNING: ***When using the Digester Gas Monitor, you must follow the instructions and warnings in this manual to assure proper and safe operation of the Digester Gas Monitor and to minimize the risk of personal injury. Be sure to maintain and calibrate the Digester Gas Monitor as described in this manual.***

1.888.610.7664 www.calcert.com sales@calcert.com

Chapter 2: Description

Overview

This chapter describes the Digester Gas Monitor's external and internal components.

External Description

This section describes the housing and all external components of the Digester Gas Monitor. For the purposes of this description, the housing door is considered the front of the monitor.

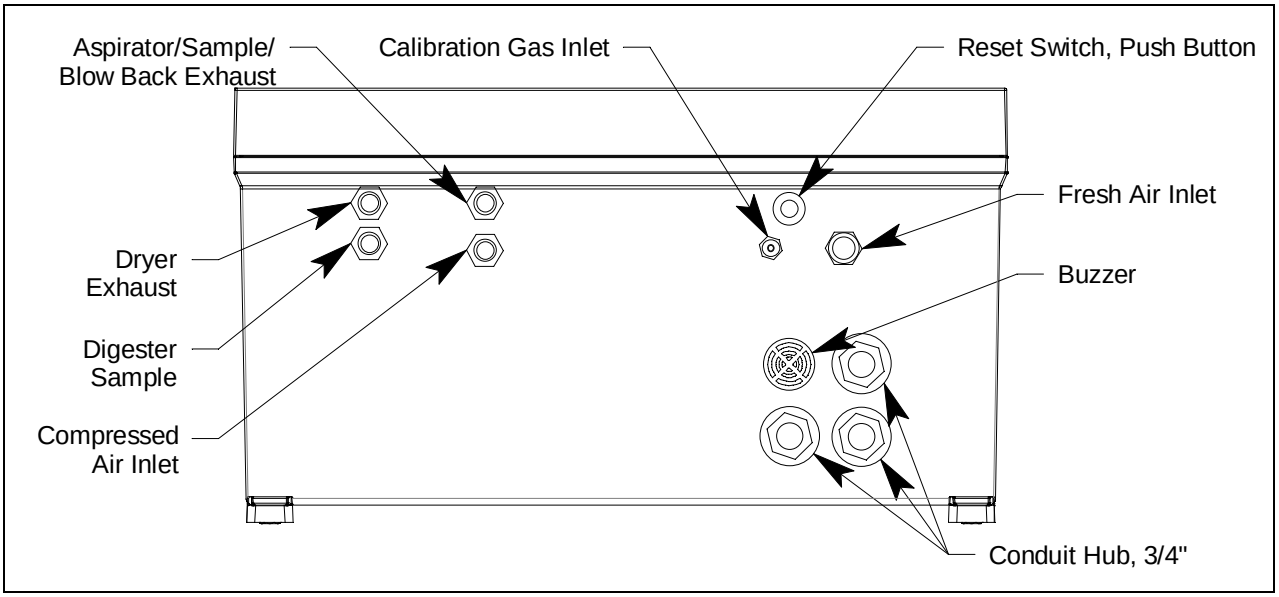

Figure 1: External Component Location

Housing

The Digester Gas Monitor's fiberglass housing is weather- and corrosion-resistant. It is suitable for installation where general purpose equipment is in use. The housing door is hinged on the left side and is secured by two latches on the right side. The LCD display, status LEDs, and flowmeters are visible through the window in the housing door. Four mounting feet are attached to the back of the housing (one at each corner). The mounting feet allow you to install the housing to a vertical surface. These mounting feet are not installed as shipped from the factory (see "Mounting the Digester Gas Monitor" on page 29 for instructions to install the mounting feet). Three conduit hubs on the bottom of the housing are for external wiring connections.

Reset Switch

The reset switch is on the bottom right of the housing in front of the buzzer. The reset switch serves four functions:

- Resets the alarm circuits for "latched" alarms after an alarm 1, alarm 2, or alarm 3 condition passes.

  You can set each channel for latched or self-resetting alarms in the Configuration Menu. See "Viewing and Changing Channel Parameters" on page 59 for more information.

1.888.610.7664 www.calcert.com sales@calcert.com

- Silences the buzzer during an alarm 1, alarm 2, or alarm 3 condition if the alarm buzzer silence parameter in the Global Menu is set to **CAN SILENCE BUZZER**. See “Viewing and Changing Global Parameters” on page 55 for more information on setting the silence feature.
- Silences and resets the optional horn/strobe during an alarm 1, alarm 2, or alarm 3 condition if the strobe alarm setting parameters are set to **Resettable STROBE** in the Configuration Menu. See “Viewing and Changing Channel Parameters” on page 59 for more information on setting the strobe alarm setting parameters.
- Silences the buzzer and optional horn/strobe if the fail silence parameter in the Global Menu is set to **CAN SILENCE FAIL**. See “Chapter 5: Global Menu” on page 55 for instructions to change this parameter.
- Displays and resets the minimum and maximum gas concentration values detected.

Buzzer

The buzzer is on the bottom right of the housing, behind the reset switch. The buzzer sounds an audible alarm to warn you of gas alarms and instrument failures.

Inlet and Exhaust Fittings

There are a total of 6 fittings on the bottom of the Digester Gas Monitor housing.

Fresh Air Inlet

The fresh air inlet is a compression fitting and is located above the reset switch and calibration gas inlet. It accepts 1/4 inch OD rigid metal or rigid plastic tubing. The tubing connected to this inlet needs to be routed to a fresh air environment.

Calibration Gas Inlet

The calibration gas inlet is a hose barb fitting and is located to the left of the reset switch. It accepts 3/16 inch ID flexible tubing and is used to connect a calibration cylinder to the Digester Gas Monitor during a calibration.

Aspirator/Sample/Blow Back Exhaust

The aspirator/sample/blow back exhaust fitting is a hose barb fitting and is located above the compressed air inlet. This fitting allows aspirator exhaust, sample exhaust, and debris removed during the blow back procedure to be expelled. It accepts 1/4 inch ID flexible tubing.

Dryer Exhaust

The dryer exhaust fitting is a compression fitting and is located along the left side of the Digester Gas Monitor’s bottom panel. It accepts 1/4 inch OD rigid metal or rigid plastic tubing.

Digester Sample

The digester sample fitting is a compression fitting and is located in the top left corner of the Digester Gas Monitor’s bottom panel. A 1/4 inch OD tube must be connected to this fitting and routed to the area to be sampled.

Compressed Air Inlet

The compressed air inlet fitting is a compression fitting and is located below the blowback exhaust and is used to connect an air compressor or a tank of compressed air. It accepts 1/4 inch OD rigid metal or rigid plastic tubing.

1.888.610.7664 www.calcert.com sales@calcert.com

Compressed Air Filter/Water Trap

The compressed air filter/water trap is supplied with the Digester Gas Monitor to protect the Digester from impurities in the compressed air line. The filter is not factory installed and must be installed by the user. See “Making Fitting Connections” on page 36 for installation instructions.

1.888.610.7664 www.calcert.com sales@calcert.com

Internal Description

This section describes the internal components of the Digester Gas Monitor. A flow diagram is shown in Figure 2 and an internal component location is shown in Figure 3.

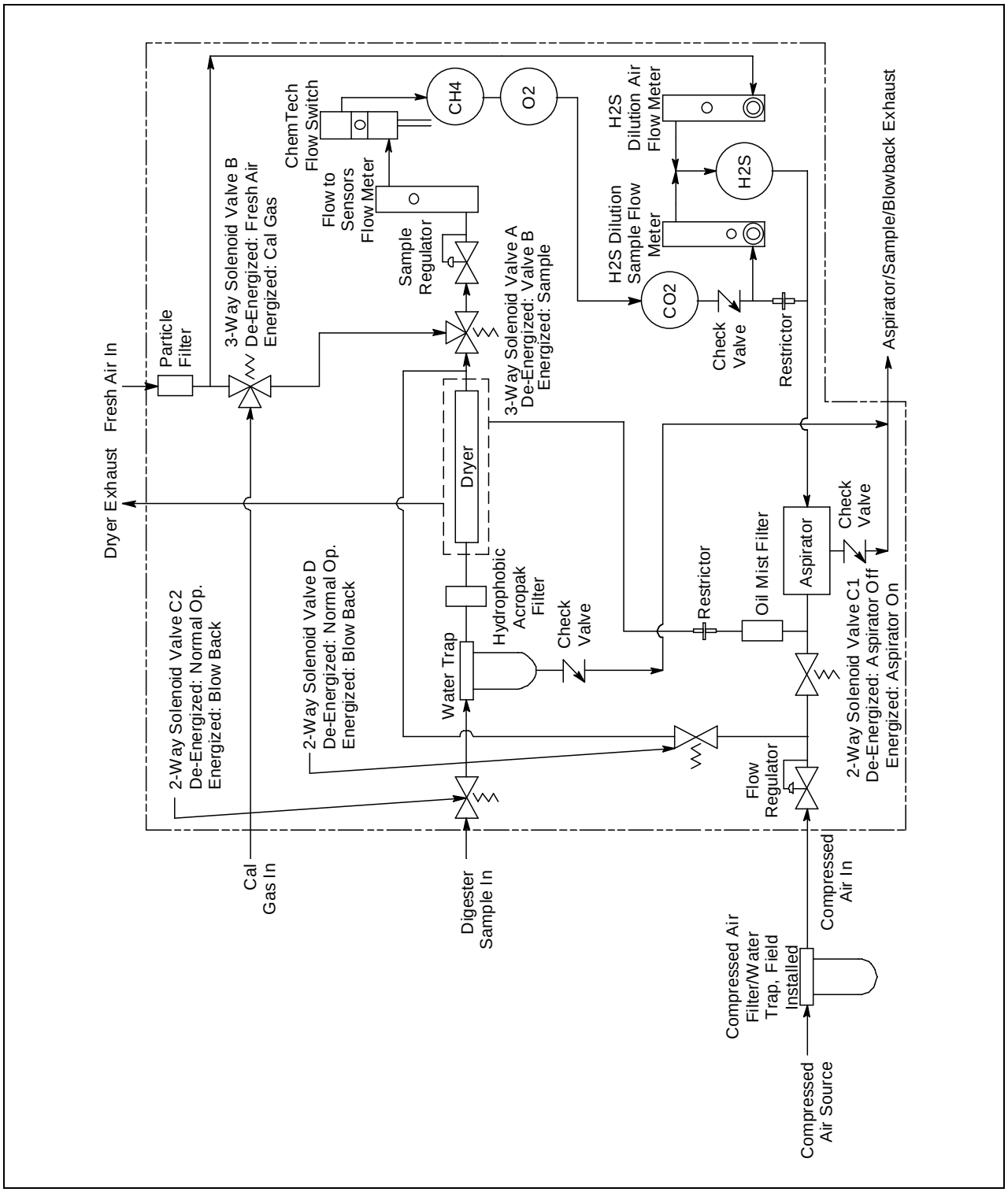

Figure 2: Flow Diagram

1.888.610.7664 www.calcert.com sales@calcert.com

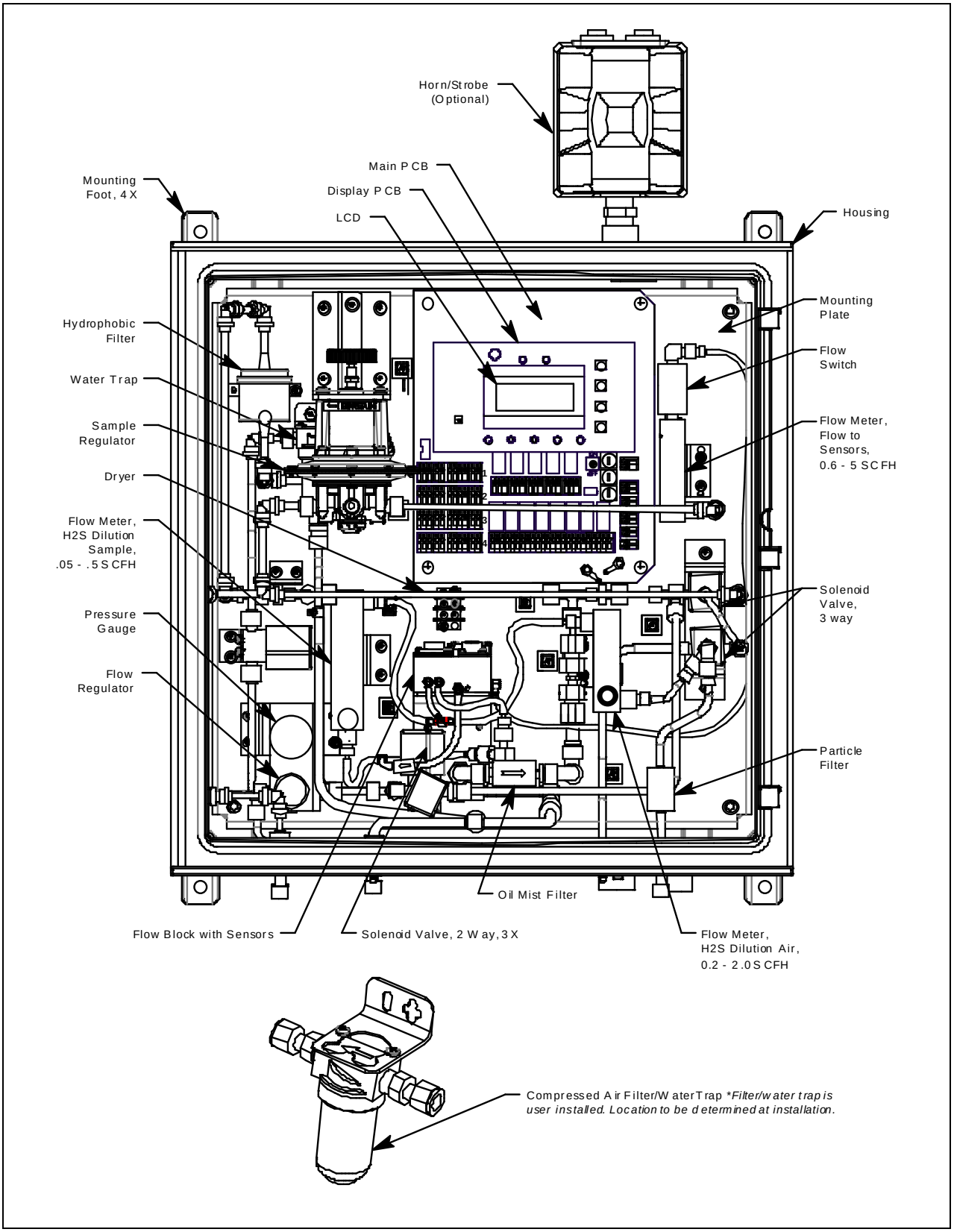

Figure 3: Internal Component Location

1.888.610.7664 www.calcert.com sales@calcert.com

Display PCB

The display PCB (printed circuit board) is mounted to the power supply mounting plate which is in turn mounted to the main PCB. The power supply mounting plate and main PCB are described below. The display PCB includes the LCD display, the LCD contrast adjust pot, the status LEDs, and the control switches. It is connected to the main PCB by the display cable which is a 20 conductor ribbon cable assembly. The display cable connects to a rectangular connector on the top edge of the display PCB and to the same type of connector labelled “FRONT PANEL” on the top edge of the main PCB.

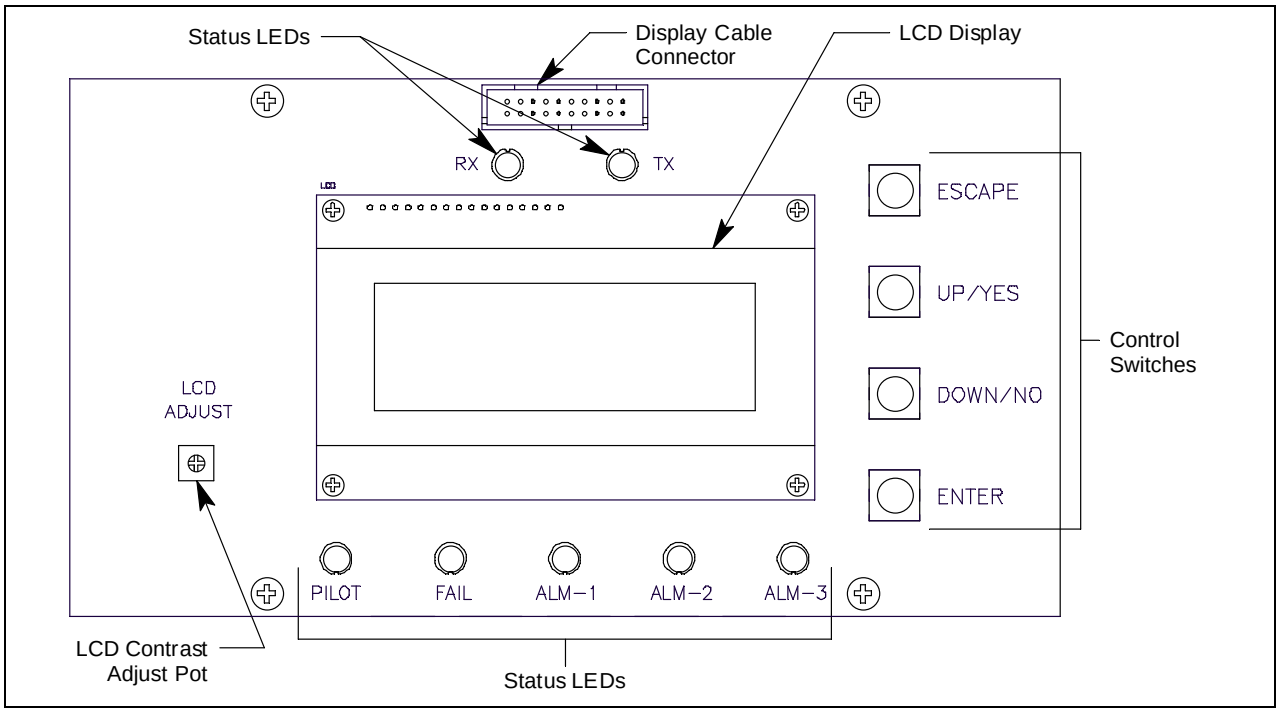

Figure 4: Display PCB Component Location

LCD Display

The four line display indicates gas readings and shows messages, settings, and other data when you are operating the various selection menus and operating modes.

LCD Contrast Adjust Pot

The LCD contrast adjust pot is located to the left of the LCD. If the LCD contrast is too dark or too light to read easily, use a small phillips screwdriver to adjust it until you can easily read the LCD.

Status LEDs

The Digester Gas Monitor includes seven status LEDs that indicate the current status of the monitor: the RX & TX LEDs, the pilot LED, the fail LED, the alarm 1 LED, the alarm 2 LED, and the alarm 3 LED (see Figure 4).

- RX & TX LEDs

  These LED’s indicate data is being received (RX) and transmitted (TX) when the Digester Gas Monitor’s Modbus output is operating.

- Pilot LED

  The PILOT LED is on when the Digester Gas Monitor is receiving incoming power, either AC or DC power.

1.888.610.7664 www.calcert.com sales@calcert.com

- Fail LED

  The fail LED turns on when the Digester Gas Monitor is experiencing a fail condition, including a flow fail. See “Fail Condition” on page 52 and “Flow Fail Condition” on page 52 for a description of these conditions.

- Alarm 1 LED

  The alarm 1 LED is on when the Digester Gas Monitor is experiencing an alarm 1 condition.

- Alarm 2 LED

  The alarm 2 LED is on when the Digester Gas Monitor is experiencing an alarm 2 condition.

- Alarm 3 LED

  The alarm 3 LED is on when the Digester Gas Monitor is experiencing an alarm 3 condition.

Control Switches

The Digester Gas Monitor includes four push button control switches that allow you to enter the selection menus and Calibration Mode, navigate through the menus and Calibration Mode, update instrument and channel parameter settings, and save changes to the settings. The control switches, listed in Table 2, are to the right of the LCD display (see Figure 4).

Table 2: Digester Gas Monitor Control Switch Functions

Button	Function
ESCAPE	• Moves backward through the menu and mode screens • Aborts operations • Cancels changes you make in the menus • Enters the Configuration Menu (press with ENTER button) • Enters the Global Menu (press with the UP/YES button)
UP (YES)	• Initiates an operation or proceeds to the next screen when a yes/no question is asked on a screen • Changes the displayed setting • Enters the Global Menu (press with ESCAPE) button • Enters the Calibration Mode (press with ENTER button)
DOWN (NO)	• Cancels an operation or sequence when a yes/no question is asked on a screen • Changes the displayed setting • Enters the Modbus Menu (press with ENTER button)
ENTER	• Saves changes you make in the menu and mode screens • Accepts the displayed parameter setting • Enters the Configuration Menu (press with ESCAPE button) • Enters Calibration Mode (press with UP/YES button) • Enters the Modbus Menu (press with DOWN/NO button) • Initiates a manual detection cycle

1.888.610.7664 www.calcert.com sales@calcert.com

Main PCB

This section describes the components of the main PCB.

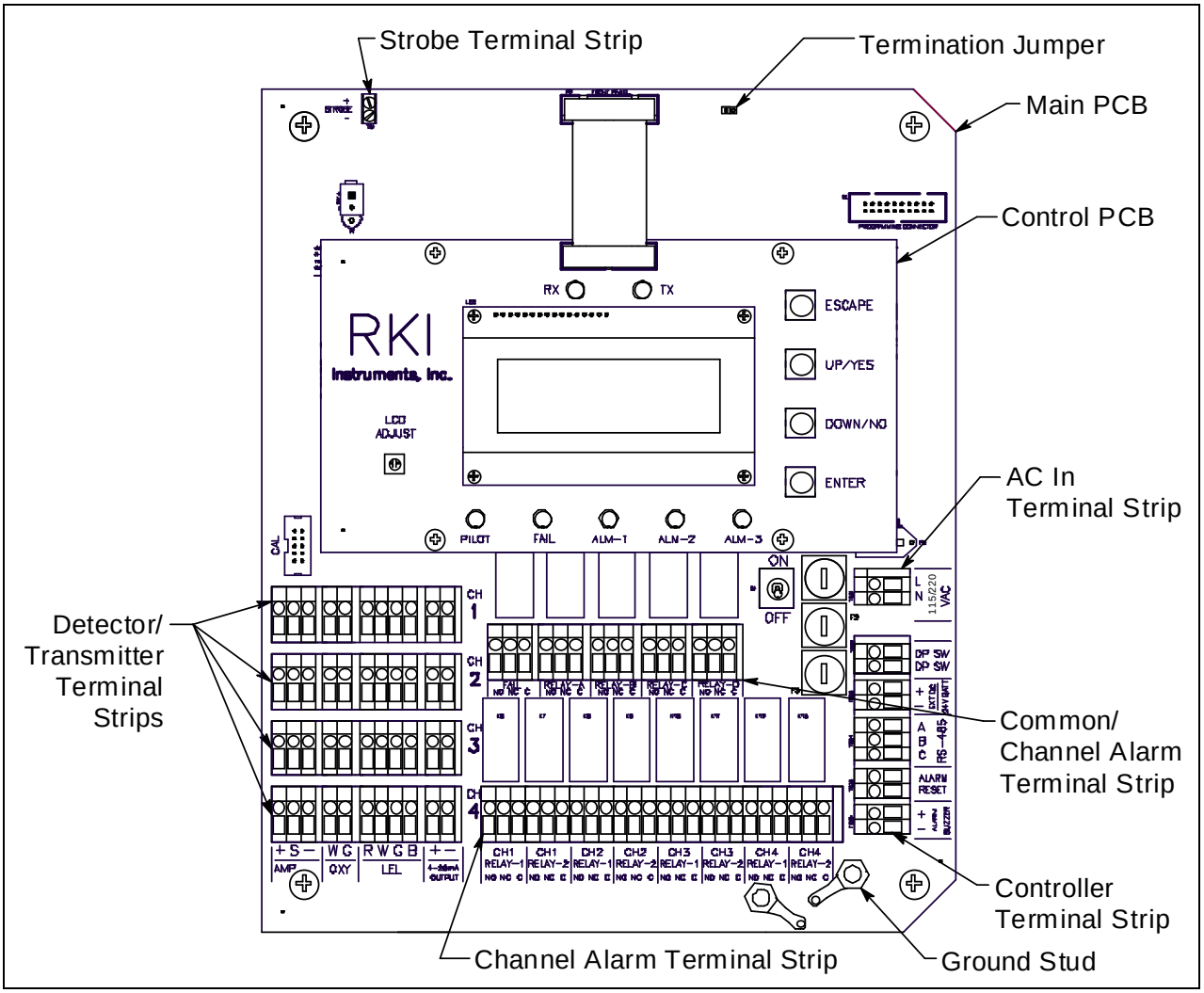

Figure 5: Main PCB Component Location

Terminal Strips

The Digester Gas Monitor includes 9 terminal strips for wiring connections. See “Wiring the Digester Gas Monitor” on page 30 for detailed wiring procedures.

Strobe Terminal Strip

The strobe terminal strip is a 2-point terminal strip located in the upper left corner of the main PCB. When the optional horn/strobe is ordered with a Digester Gas Monitor, the strobe terminal strip is used to wire the horn/strobe.

CAUTION: *The strobe terminals are intended for use with the RKI supplied optional horn/strobe. Consult RKI Instruments, Inc. before attempting to use these terminals for any other alarm device.*

1.888.610.7664 www.calcert.com sales@calcert.com

Detector/Transmitter Terminal Strips

Four detector/transmitter terminal strips are located along the bottom left side of the main PCB (see Figure 5 on page 18). These four 11-point terminal strips facilitate wiring connections to the detectors. They also provide terminals to connect a recording device to a 4 to 20 mA output for each channel. The top terminal strip is for channel 1 connections and each subsequent strip is used for the next channel with the bottom terminal strip being for channel 4 connections. The Digester Gas Monitor detectors are factory wired to the terminal strips.

Channel Alarm Terminal Strip

A channel alarm terminal strip is located to the right of the channel 4 detector/transmitter terminal strip (see Figure 5 on page 18). This 24-point terminal strip facilitates wiring external alarm devices (horn, light, etc.) to relay contacts that are field configurable for alarm levels and operation and are controlled by individual channels. The contacts are labelled NO (normally open), NC (normally closed), and C (common). See "Viewing and Changing Global Parameters" on page 55 and "Viewing and Changing Channel Parameters" on page 59 for instructions to configure the operation of these contacts.

Common/Channel Alarm Terminal Strip

The common/channel alarm terminal strip is located in approximately the middle of the main PCB above the channel alarm terminal strip. The terminals for relays A, B, C, and D are factory wired and are not available for customer use. Only the fail relay terminals are available for customer use. The contacts are labelled NO (normally open), NC (normally closed), and C (common).

Controller Terminal Strip

The 9-point controller terminal strip is along the lower right side of the main PCB (see Figure 5 on page 18). The controller terminal strip facilitates various internal and external wiring connections. Table 3 lists the function of each terminal.

Table 3: Terminal Assignments for the Controller Terminal Strip

Terminal	Connects to:
DP SW DP SW	Flow switch (factory wired)
EXT DC/24V BATT +	+ connection from 24 VDC power source[1] (or 24 V backup battery)[1]
EXT DC/24V BATT -	- connection from 24 VDC power source[1] (or 24 V backup battery)[1]
RS-485 A	Allow connection of the Digester Gas Monitor to a Modbus network
RS-485 B	
RS-485 C	
Alarm Reset	Reset Switch Terminals (factory wired)
Alarm Reset	
Alarm Buzzer +	Buzzer + connection (factory wired)
Alarm Buzzer -	Buzzer - connection (factory wired)

[1] If 24 VDC is used as primary power source do not make wiring connections to the AC terminal strip.

1.888.610.7664 www.calcert.com sales@calcert.com

AC Terminal Strip

The 2-point AC terminal strip is located above the controller terminal strip (see Figure 5 on page 18). The AC terminal strip facilitates wiring connections to the AC power source.

NOTE: The AC power source's ground wire must be connected to the field ground stud. See "Connecting the AC Power Source" on page 32.

Relays

The Digester Gas Monitor includes eight channel relays and one common fail relay. It also includes four common/channel relays which are factory set for operational use of the Digester Gas Monitor. All the relays have single-pole double-throw (SPDT) contacts, also known as form C contacts, and are rated for 10 amps at 115/220 VAC (resistive) or 10 amps at 30 VDC (resistive). The contacts are available at the channel alarm terminal strip and are labelled NO (normally open), NC (normally closed), and C (common).

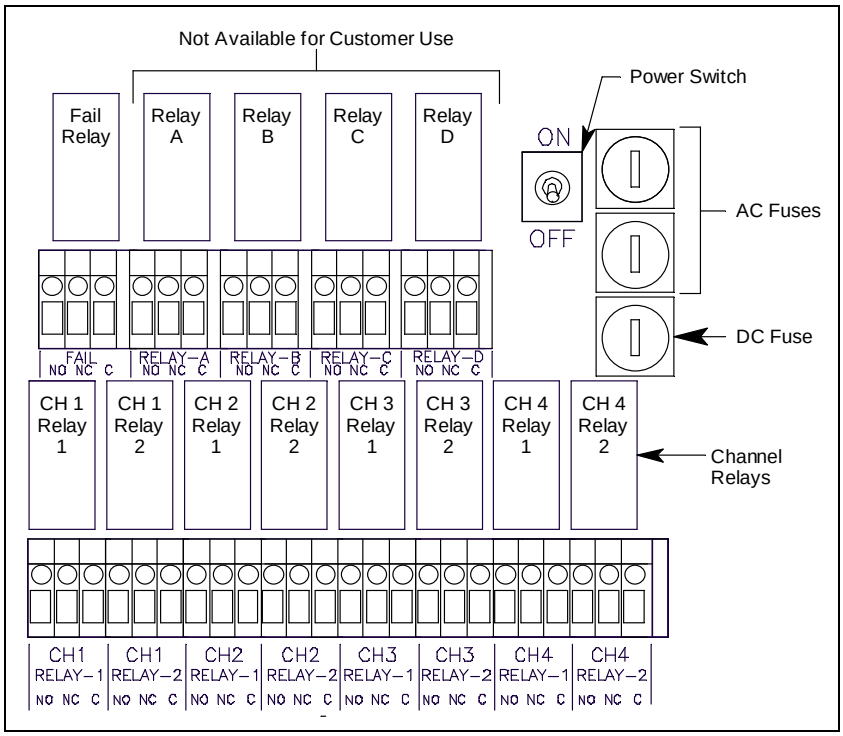

Figure 6: Relay Allocation

Channel Relays & Fail Relay

The eight channel relays are above the channel alarm terminal strip (see Figure 5 on page 18 and Figure 6 on page 20). These relays are dedicated to specific channels. Figure 6 illustrates the allocation of the channel relays.

The fail relay is located above the channel relays. The fail relay is a common relay.

Common/Channel Relays

The four common/channel relays, relays A, B, C, and D, are above the common/channel alarm terminal strip (see Figure 5 on page 18 and Figure 6 on page 20). These relays are used in the operation of the Digester Gas Monitor and are not available for customer use.

1.888.610.7664 www.calcert.com sales@calcert.com

Termination Jumper

A two pin header with a termination jumper installed is located near the top edge of the main PCB to the right of the display cable connector. It is labelled “RS-485 Line Terminator” on the PCB silkscreen. The jumper has no function unless the Digester Gas Monitor is wired into a Modbus installation. See “Chapter 9: RS-485 Modbus Output” on page 76 for instructions to use the Digester Gas Monitor in a Modbus system.

Ground Jumper

A two pin header with a jumper installed is located along the right edge of the main PCB just above the termination jumper. It is labelled “P3” on the PCB silkscreen. Leave this jumper installed unless directed to remove it for a Modbus installation. See “Chapter 9: RS-485 Modbus Output” on page 76 for instructions to use the Digester Gas Monitor in a Modbus system.

Ground Stud

The threaded ground stud is used for making connections to earth ground. It is located in the lower right corner of the main PCB and is connected through the main PCB to the **G** (ground) terminal on the AC terminal strip. It is also connected to each conduit hub with a wire. A kep nut on the stud may be removed for installation of one or more user supplied lugs to make wiring connections to earth ground. This stud is typically used to connect the shield drain wire of shielded cable to earth ground at the Digester Gas Monitor.

Power Switch

The power switch is between the common/channel relays and the fuses (see Figure 5 on page 18 and Figure 6 on page 20). The power switch turns the incoming AC power source on and off at the Digester Gas Monitor. When the switch is up, the power is on.

Power Supply

The power supply is mounted to the power supply mounting plate which is located behind the display PCB. The power supply mounting plate is mounted to the main PCB with four standoffs. The power supply receives AC power from the external power source and converts it to a DC voltage that is usable by the Digester Gas Monitor circuitry. A polycarbonate cover prevents accidental contact with the AC terminals on the power supply.

Fuses

Two AC fuses and one DC fuse are used in the Digester Gas Monitor. The fuses are located on the right side of main PCB, between the power switch and the AC in terminal strip (see Figure 3 on page 15 and Figure 6 on page 20). The AC fuses are labelled F1, F2 and the DC fuse is labelled F3 on the PCB silkscreen. They cut off the incoming AC or DC power in the event of a short circuit or other electrical fault which causes a high current draw in the Digester Gas Monitor. They are housed in vertical fuse holders and are held in each holder by a quarter turn cover. The AC fuses are rated at 6 A, 250 V, 1/4 x 1 1/4 inch, fast acting. The DC fuse is rated at 10A, 250V, 1/4 x 1 1/4 inch, fast acting.

Flow Regulator and Gauge

The flow regulator and gauge are located in the lower left corner of the Digester Gas Monitor housing. The flow regulator’s maximum allowable inlet pressure is 300 psi. A gauge above the flow regulator indicates the output pressure (between 5 and 50 psi). The output pressure, and system flow, can be adjusted using the knob on the front of the flow regulator. The system flow rises or falls as the output pressure is increased or decreased.

1.888.610.7664 www.calcert.com sales@calcert.com

Sample Regulator

The sample regulator is located in the upper left corner of the Digester Gas Monitor and can regulate a the sample down, if the sample is at a positive pressure.

As shipped from the factory, the regulator is fully open (fully clockwise) and does not regulate the sample down. To adjust the regulator, loosen the nut and then turn the adjustment knob.

Flow Switch

The flow switch is located in the upper right corner of the Digester Gas Monitor housing. The flow switch monitors the flow to the sensors and actuates if the flow rate goes below 1.6 SCFH.

Flow Block

The flow block is located in the center of the Digester Gas Monitor and is designed to accept the gas sensors and route sample to each sensor. The methane, oxygen, and CO_2 sensors are retained in the flow block by brackets. The H_2S sensor is retained by the O-ring compression force of the O-rings it is inserted past. When viewed from the front of the Digester Gas Monitor, the methane sensor is in the front right corner, the H_2S sensor is in the front left corner, the oxygen sensor is in the back right corner, and the CO_2 sensor is in the back left corner.

Sensors

Infrared Methane (CH_4) Sensor

The IR CH_4 sensor is an infrared type plug-in detector. The IR CH_4 sensor is installed in the front right corner of the flow block when viewing the flow block from the front of the Digester Gas Monitor. A small preamp circuit board with a 4-wire cable mates to the IR CH_4 sensor and retains it in the flow block. The cable is wired to the main PCB. The preamp circuit board allows you to replace the sensor without disconnecting the wiring.

Oxygen (O_2) Sensor

The oxygen sensor is installed in the right back corner of the flow block when viewing the flow block from the front of the Digester Gas Monitor. The oxygen cell is protected within the sensor assembly. Through a series of chemical and electronic reactions, the oxygen cell produces a millivolt output that is proportional to the detection range of the Digester Gas Monitor. The leads extending from the sensor terminate in a connector that leads to the main PCB. The connector allows the sensor to be replaced without disconnecting the wiring.

Carbon Dioxide (CO_2) Sensor

The CO_2 sensor is an infrared type plug-in detector. The CO_2 sensor is installed in the back left corner of the flow block when viewing the flow block from the front of the Digester Gas Monitor. A small preamp circuit board with a 4-wire cable mates to the CO_2 sensor and retains it in the flow block. The cable is wired to the main PCB. The preamp circuit board allows you to replace the sensor without disconnecting the wiring.

1.888.610.7664 www.calcert.com sales@calcert.com

Hydrogen Sulfide (H_2S) Sensor

The hydrogen sulfide sensor is a plug-in sensor that plugs into the back of the H_2S preamp. The hydrogen sulfide sensor is installed in the front left corner of the flow block when viewing the flow block from the front of the Digester Gas Monitor. The sensor and preamp are retained in the flow block by two screws.

Through a series of chemical and electronic reactions, the H_2S sensor produces a millivolt output that is proportional to the detection range of the Digester Gas Monitor. The wires extending from the amplifier are connected to the main PCB.

Flowmeters

Three flowmeters are part of the Digester Gas Monitor's flow system.

Flow to Sensors Flowmeter

The Flow to Sensors flowmeter is located along the right side of the Digester Gas Monitor's flow system and indicates the flow rate being applied to the sensors. This flow should always be 3.0 SCFH.

H_2S Dilution Sample Flowmeter

The H_2S Dilution Sample flowmeter is located in the middle left of the Digester Gas Monitor's flow system and indicates the sample flow rate to the H_2S sensor. The flowmeter's units are "mm" instead of "SCFH". The appropriate mm setting depends on the full scale range of the H_2S sensor. See "Adjusting the Flow Rates" on page 42 for more information.

H_2S Dilution Air Flowmeter

The H_2S Dilution Air flowmeter is located in the middle right of the Digester Gas Monitor's flow system and indicates the fresh air flow rate to the H_2S sensor. The appropriate flow rate depends on the full scale range of the H_2S sensor. See "Adjusting the Flow Rates" on page 42 for more information.

Hydrophobic Filter

The hydrophobic filter is located in the upper left corner of the Digester Gas Monitor housing and prevents water from entering the flow system through the sample inlet that may have gotten past the water trap.

Water Trap

The water trap is located in the upper left corner of the Digester Gas Monitor housing. It is slightly below and to the right of the hydrophobic filter. The water trap prevents water from entering the flow system through the sample inlet. During the blowback procedure, the water trap is emptied of its contents.

Dryer

The dryer is located in the center of the Digester Gas Monitor and removes any excess humidity in the sample before the sample enters the flow chamber.

Solenoid Valves

There are five solenoid valves located throughout the Digester Gas Monitor's flow system. They control the direction of the flow. They are controlled by the Digester Gas Monitor's software and are actuated at various stages of the sampling process.

1.888.610.7664 www.calcert.com sales@calcert.com

Check Valves

A check valve in the blowback exhaust line prevents fresh air from entering the sample line through the blowback exhaust line.

1.888.610.7664 www.calcert.com sales@calcert.com

Factory Wiring

The figure below shows the factory wiring. Standard channel assignment is shown. If your Digester Gas Monitor has less than four sensors, your detector wiring will be slightly different.

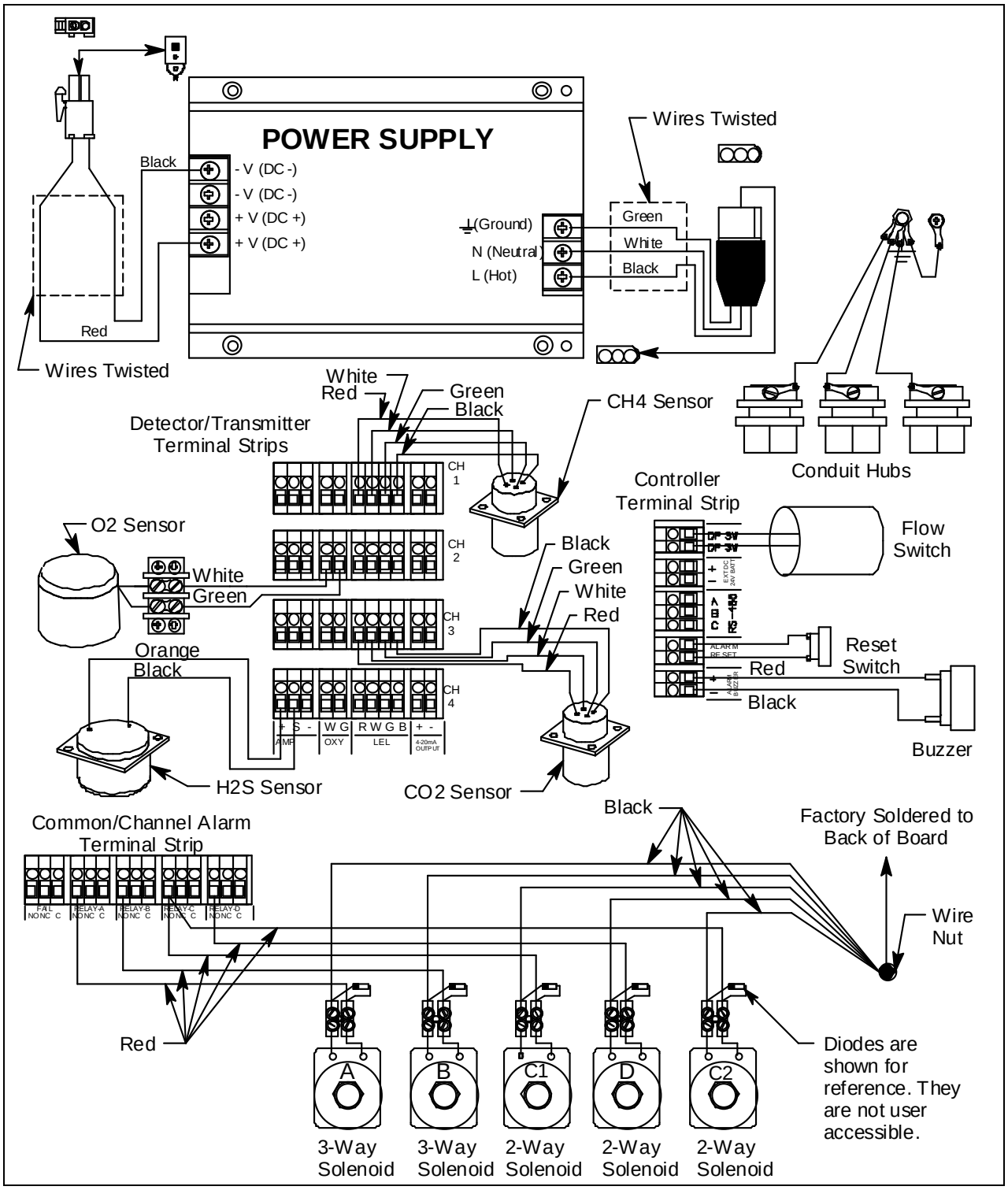

Figure 7: Factory Wiring

1.888.610.7664 www.calcert.com sales@calcert.com

Optional Horn/Strobe

This section describes the optional horn/strobe available for the Digester Gas Monitor. It can be ordered with the Digester Gas Monitor or it can be ordered at a later date and be field installed. The horn/strobe is wired to the Strobe Terminal Strip as shown in Figure 8 and Figure 9 below.

NOTE: If the Digester Gas Monitor is not ordered with a horn/strobe, the hole that is intended for use with the horn/strobe will be plugged and the receptacle will not be installed.

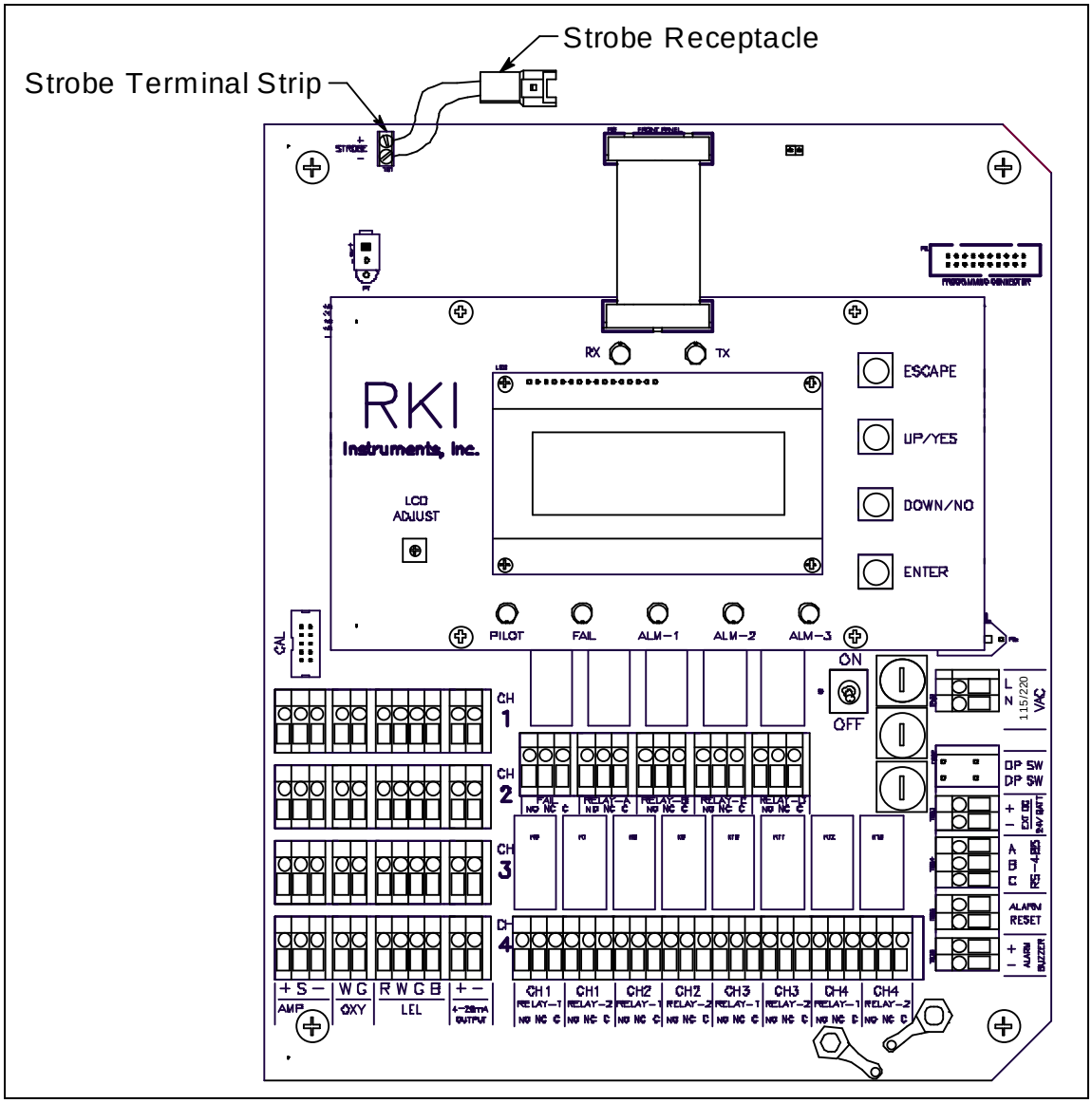

Figure 8: Strobe Terminal Strip Location

The Digester Gas Monitor can be ordered with a horn/strobe. This optional horn/strobe allows the user to have both a strobe and a horn connected to the "Strobe" terminals of the Digester Gas Monitor. Strobe operation can be programmed in the Global Menu (see "Chapter 5: Global Menu" on page 55) and in Configuration Mode (see "Chapter 6: Configuration Menu" on page 59).

1.888.610.7664 www.calcert.com sales@calcert.com

NOTE: See “Chapter 3: Installation and Start Up” on page 29 for complete Digester Gas Monitor installation instructions.

CAUTION: *Do not adjust the strobe brightness or the horn volume at the horn/strobe, as this may overload the Digester Gas Monitor strobe control circuit.*

Even if the horn/strobe is ordered at the same time as the Digester Gas Monitor, the horn/strobe does not come factory installed to the Digester Gas Monitor. To install the horn/strobe:

1. A 3/4 inch NPT nipple is provided for strobe installation. It is not installed on the horn/strobe and is in its own bag in the shipping box. Guide the cable coming out of the horn/strobe through the nipple.
2. Install the nipple onto the horn/strobe using an appropriate thread sealing method such as Teflon tape.
3. If the horn/strobe has been ordered with the Digester Gas Monitor, a conduit hub will be installed on the top of the housing and will be plugged with a conduit plug. The plug is included to prevent any debris from falling into the Digester Gas Monitor during shipment and installation. Remove the conduit plug from the strobe conduit hub. Continue to step 5.
4. If the horn/strobe has been ordered for a Digester Gas Monitor that is already installed, a plug is installed in a hole in the top of the housing. Remove this plug and install the conduit hub that came with the horn/strobe.

   A receptacle with 4 inch wires is included with the horn/strobe. Connect the red wire to the “+” terminal and connect the black wire to the “-” terminal of the Strobe Terminal Strip as shown in Figure 9.
5. Guide the cable coming from the horn/strobe through the conduit hub at the top right of the Digester Gas Monitor housing.

NOTE: If there is a plug in the conduit hub, remove it before attempting to install the horn/strobe.

6. Screw the horn/strobe into the conduit hub at the top right of the Digester Gas Monitor housing using an appropriate thread sealing method such as Teflon tape. Make sure the horn/strobe faces forward when installed.

1.888.610.7664 www.calcert.com sales@calcert.com

7. Connect the plug coming from the horn/strobe to the receptacle coming from the strobe terminal strip.

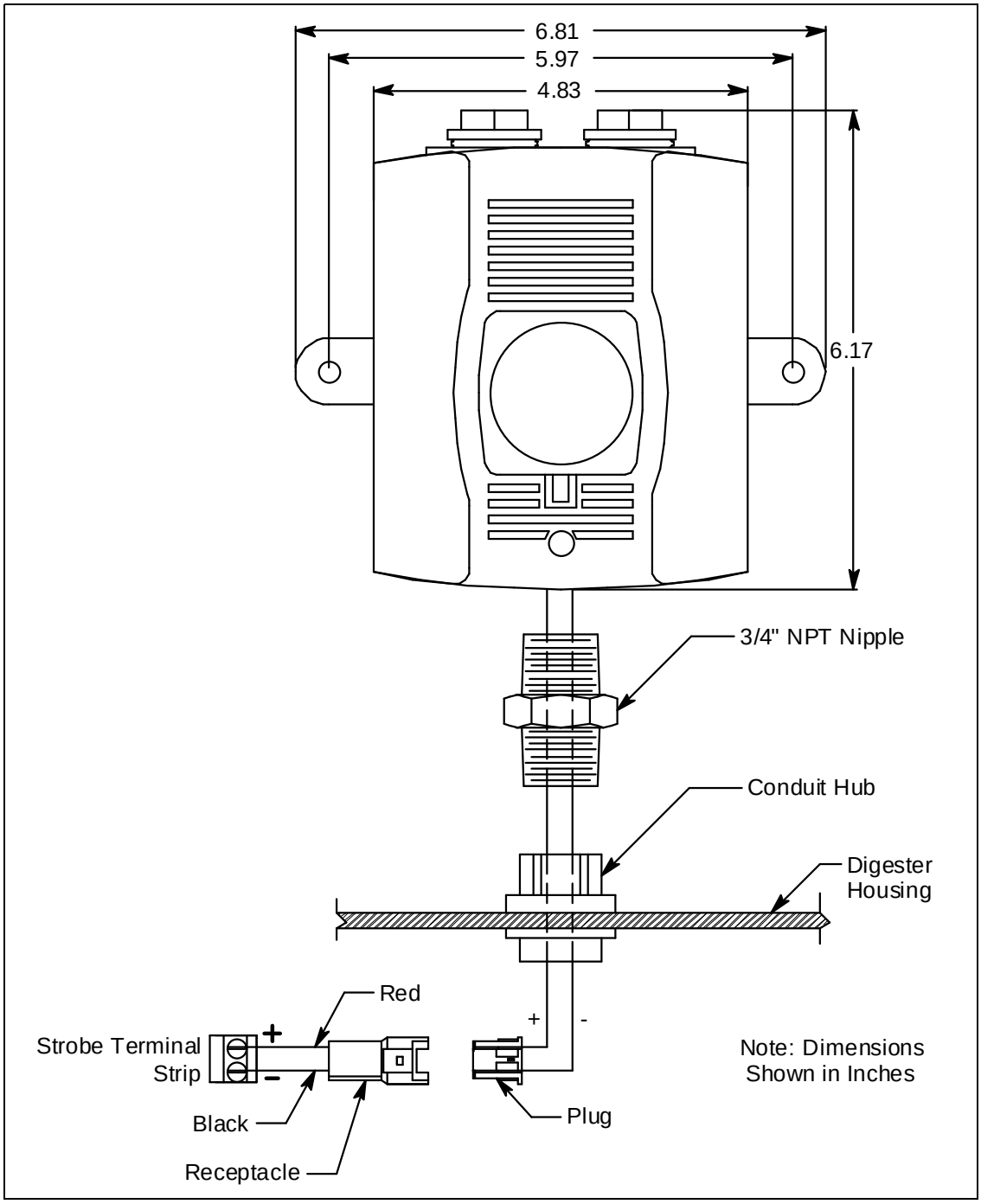

Figure 9: Horn/Strobe Wiring and Dimensions

1.888.610.7664 www.calcert.com sales@calcert.com

Chapter 3: Installation and Start Up

Overview

This chapter describes procedures to mount the Digester Gas Monitor, make wiring connections to the monitor, and start up the monitor.

WARNING: ***Perform all installation and start-up procedures in a known fresh air environment, an environment free of combustible and toxic gasses and of normal oxygen content. The Digester Gas Monitor is not in operation as a gas monitoring device until the start up procedure is complete.***

Mounting the Digester Gas Monitor

Perform the following procedure to install the Digester Gas Monitor at the mounting site.

1. Select the mounting site. When you select the mounting site, consider the following factors:
   - Is an AC or DC power source available?
   - Is a vertical surface available to mount the Digester Gas Monitor?
   - Is there enough room to open the housing door and make wiring and tubing connections through the conduit hubs and fittings at the bottom of the housing?
   - Are the display screen and status lights visible?
2. Close and latch the housing door.
3. The mounting feet for the Digester Gas Monitor are shipped in a separate bag that is taped to the outside of the housing. Install the mounting feet to each corner on the back of the housing so that the notched portion sits on the edge of the housing. See the figure below.

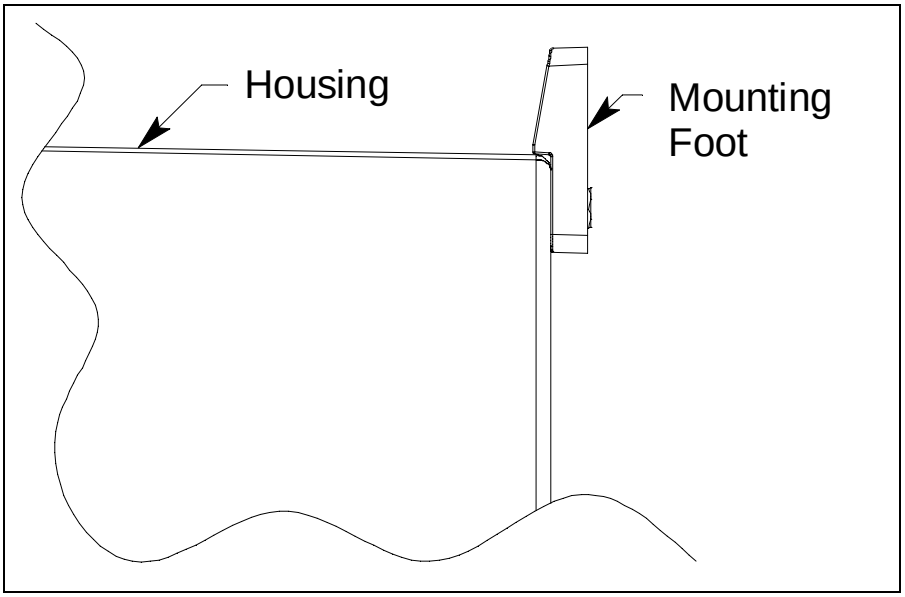

Figure 10: Mounting Feet Installation

1.888.610.7664 www.calcert.com sales@calcert.com

4. Prepare the selected mounting site as required to mount the Digester Gas Monitor. It should be mounted at eye level (4 1/2 to 5 feet from the floor). Refer to Figure 11 for the outline and mounting dimensions.
5. Position the monitor on the vertical mounting surface. Use a level to ensure that the Digester Gas Monitor housing is level in all planes. The flowmeters will not operate properly if the Digester Gas Monitor is not mounted as shown below and level in all planes.
6. Insert 5/16 in. screws through the slots in the mounting feet at each corner of the housing to secure the housing to the mounting surface.

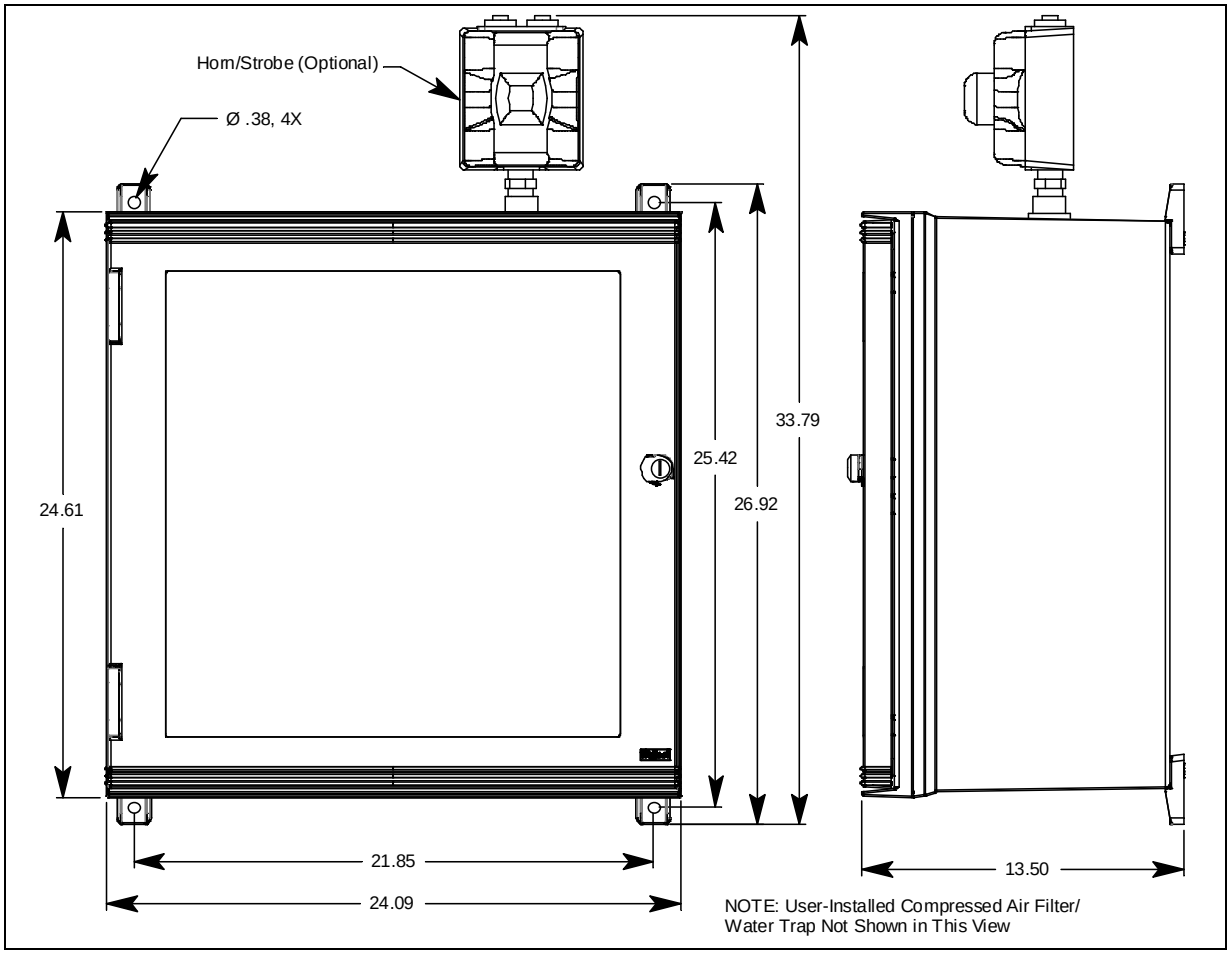

Figure 11: Mounting Dimensions

Wiring the Digester Gas Monitor

This section describes procedures to connect the AC power source, DC power source, Modbus wiring (refer to "Wiring the Digester Gas Monitor in a Modbus System" on page 76), external alarms, and recording devices. See Figure 12 on page 31 for a general diagram of all external wiring to the Digester Gas Monitor.

WARNING: ***Make all connections to the Digester Gas Monitor before you plug in or turn on the AC or DC power source. Before you make any wiring adjustments, always verify that all power sources are not live.***

1.888.610.7664 www.calcert.com sales@calcert.com

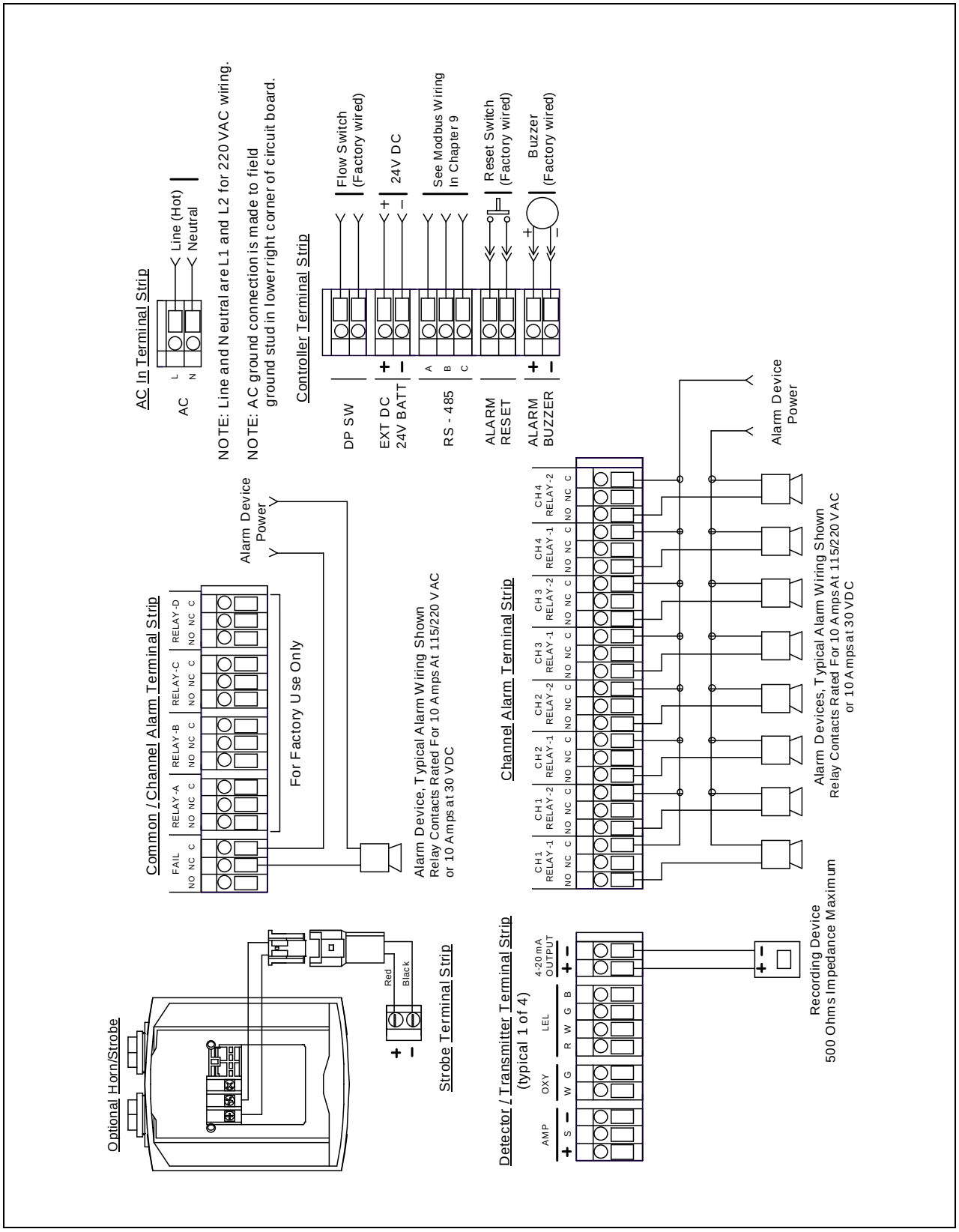

Figure 12: External Wiring Diagram

1.888.610.7664 www.calcert.com sales@calcert.com

Connecting the AC Power Source

NOTE: If you are using DC power as the primary power source, go to the next section, “Connecting the DC Power Source”.

The AC in terminal strip will accept 24 - 14 AWG wire. When selecting wire to connect the AC power source to the Digester Gas Monitor, be sure to meet the local electrical code. Also be sure to use an appropriate circuit breaker in the AC line close to the Digester Gas Monitor that meets the local electrical code.

Perform the following procedure to connect the AC power source to the Digester Gas Monitor.

WARNING: ***Verify that the power source is unplugged or turned off before you continue with this procedure.***

1. Turn off or unplug all incoming power to the Digester Gas Monitor.
2. Open the housing door, then place the power switch in the OFF position.

CAUTION: *The power switch does not control DC input power.*

3. Locate the AC in terminal strip (see Figure 5 on page 18). The terminals are labelled **L** and **N** for line and neutral respectively.
4. Install an appropriately rated cable bushing or conduit in the right-most conduit hub on the bottom of the Digester Gas Monitor housing.
5. Guide the AC power cord or wires in conduit through the right-most conduit hub on the bottom of the Digester Gas Monitor housing.
6. Connect the AC wires to the AC in terminal strip as shown in Figure 13 below.

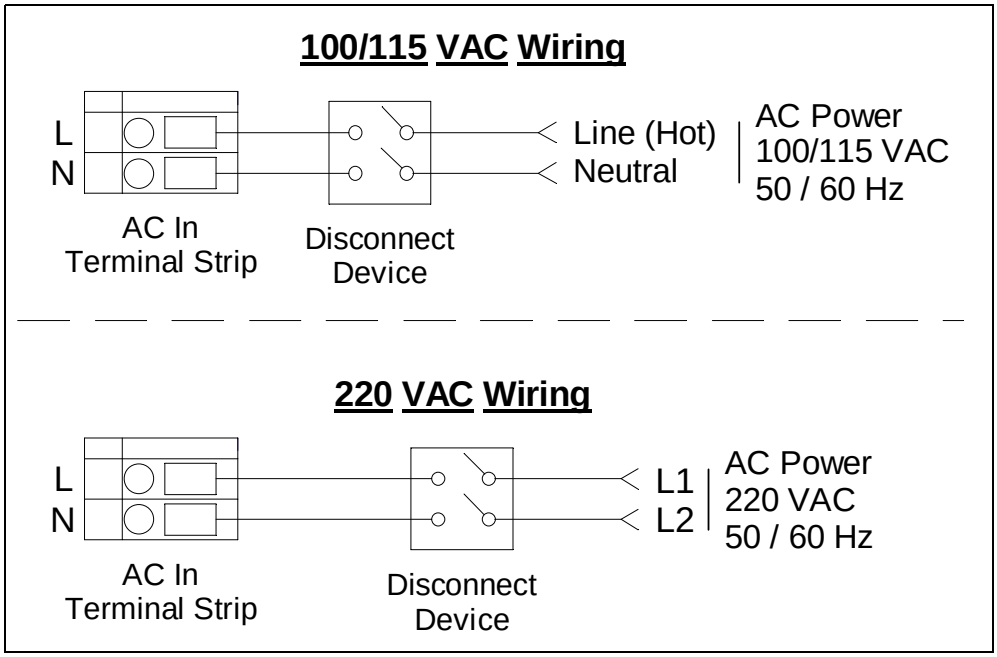

Figure 13: AC Power Wiring

1.888.610.7664 www.calcert.com sales@calcert.com

7. Connect the ground wire to the crimp terminal that is factory installed on the field ground stud. The field ground stud is marked with a ground symbol. A factory ground stud is located just to the left of the field ground stud and is not for field use.
   a. Remove the lug from the field ground stud. There is only 1 lug on the stud.
   b. Crimp the ground wire to the lug.
   c. Reinstall the lug.

Connecting the DC Power Source

WARNING: ***Verify that the power source is unplugged or turned off before you continue with this procedure.***

DC power may be used as a primary power source. It may also be used as a backup power source with a 24 VDC battery if AC power is the primary power source. If your Digester Gas Monitor does not include the battery charging feature, you may use a self contained 24 VDC backup that keeps its batteries charged while AC power is on and recharges the batteries when AC power returns after a power failure. If your Digester Gas Monitor includes the battery charging feature, see "Battery Charging (Optional)" on page 47 for a complete description of this feature and what type of battery to use. If DC power is the **primary** power source, **DO NOT** connect AC power.

1. Turn off or unplug all incoming power to the Digester Gas Monitor.
2. Open the housing door, then place the power switch in the OFF position.

CAUTION: *The power switch does not control DC input power.*

3. Locate the DC input power terminals on the controller terminal strip near the lower right edge of the main PCB (see Figure 5 on page 18). They are labelled **EXT DC/24V BATT+** and **EXT DC/ 24V BATT -**.
4. Install an appropriately rated cable bushing or conduit in an unused conduit hub on the bottom of the Digester Gas Monitor housing.
5. Guide a DC power cord or two wires in conduit through the selected conduit hub on the bottom of the Digester Gas Monitor housing.
6. Connect the DC power wires to the controller terminal strip as shown in Figure 14 below.

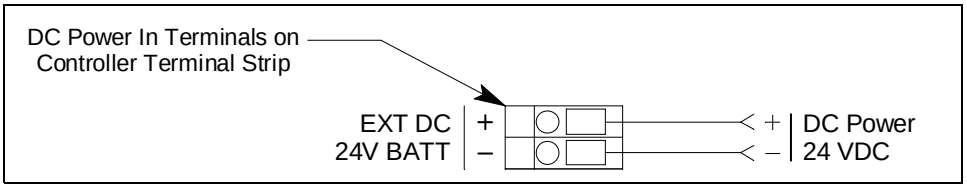

Figure 14: DC Power Wiring

NOTE: The Digester Gas Monitor will operate from the DC input down to 18.5 volts. If a self contained backup battery is used, see its operator's manual for a description of its recharging characteristics. If your Digester Gas Monitor includes the battery charging feature and a backup battery is used, the Digester Gas Monitor will recharge the battery when AC power has returned after a power failure. See "Battery Charging (Optional)" on page 47 for a complete description of the battery charging feature.

1.888.610.7664 www.calcert.com sales@calcert.com

RS-485 Modbus Wiring

See “Wiring the Digester Gas Monitor in a Modbus System” on page 76 for wiring connections to the RS-485 Modbus terminals.

Connecting External Alarms

The relays are rated for 10 amps at 115/220 VAC (resistive) or 10 amps at 30 VDC (resistive).

Before connecting any external alarm devices to the relay contacts, make sure you know how you want the devices to operate. For example, confirm under what alarm condition you want a device to turn on or turn off and what channel is going to control the device. Also make sure that the parameter settings that apply to the relays in the Global Menu and the Configuration Menu are set so that the desired alarm device operation is obtained. See “Viewing and Changing Global Parameters” on page 55 and “Viewing and Changing Channel Parameters” on page 59 for information about the relay parameters.

Perform the following procedure to connect external alarm devices to the Digester Gas Monitor.

1. Turn off or unplug all incoming power to the Digester Gas Monitor.
2. Open the housing door, then place the power switch in the OFF position.

CAUTION: *The power switch does not control DC input power.*

---

3. Locate the applicable alarm terminal strip (see Figure 5 on page 18).
4. Install an appropriately rated cable bushing or conduit in an unused conduit hub on the bottom of the Digester Gas Monitor.
5. Guide the wiring of the external alarm device through the selected conduit hub on the bottom of the Digester Gas Monitor housing.
6. Connect the leads from the external alarm device and an external power source to the selected channel alarm or fail relay contact terminals as shown in Figure 15.

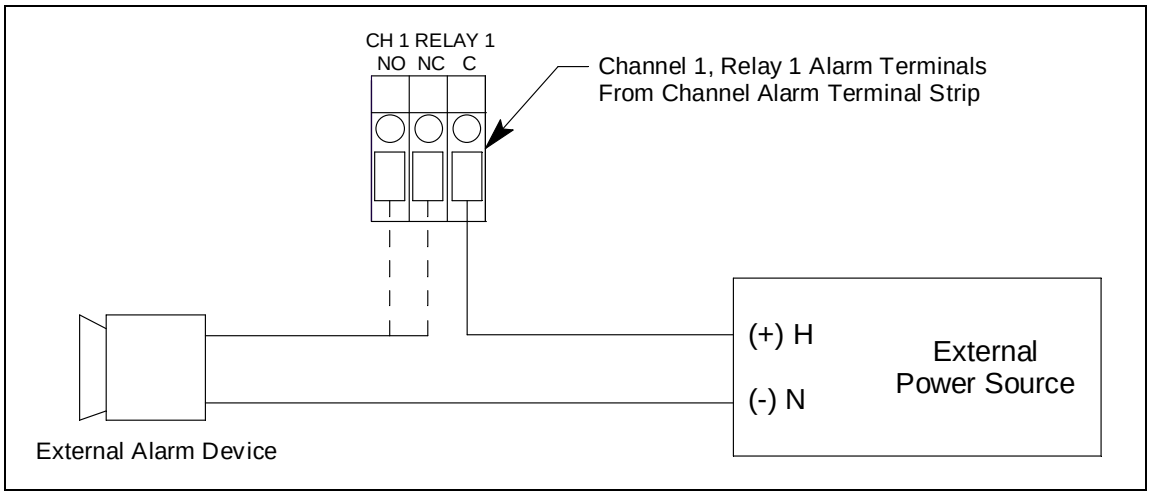

Figure 15: External Alarm Wiring

7. Repeat step 5 and step 6 for additional external alarm devices.

1.888.610.7664 www.calcert.com sales@calcert.com

Connecting Recorders

Perform the following procedure to connect an analog signal recording device to the Digester Gas Monitor. The output at the recorder output terminals for each channel is a 4 - 20 mA signal that corresponds to the detection range of the detector connected to that Digester Gas Monitor channel. Be sure to read the recording device's operator's manual before installation and follow all wiring procedures and recommendations made by the recording device's manufacturer.

1. Turn off or unplug incoming power to the Digester Gas Monitor.
2. Open the housing door, then place the power switch in the OFF position.

CAUTION: *The power switch does not control DC input power.*

---

3. Locate the recorder output terminals on the right end of the detector/transmitter terminal strips. See Figure 5 on page 18 to assist you in locating the recorder output terminals. They are labelled **4 - 20 mA OUTPUT +** and **4 - 20 mA OUTPUT -**.
4. Install an appropriately rated cable bushing or conduit in an unused conduit hub on the bottom of the Digester Gas Monitor housing.
5. Guide the wiring from the recording device through the selected conduit hub on the bottom of the Digester Gas Monitor housing.
6. Connect the leads from the recording device to the recorder output terminals of the selected active channels as shown in Figure 16 below

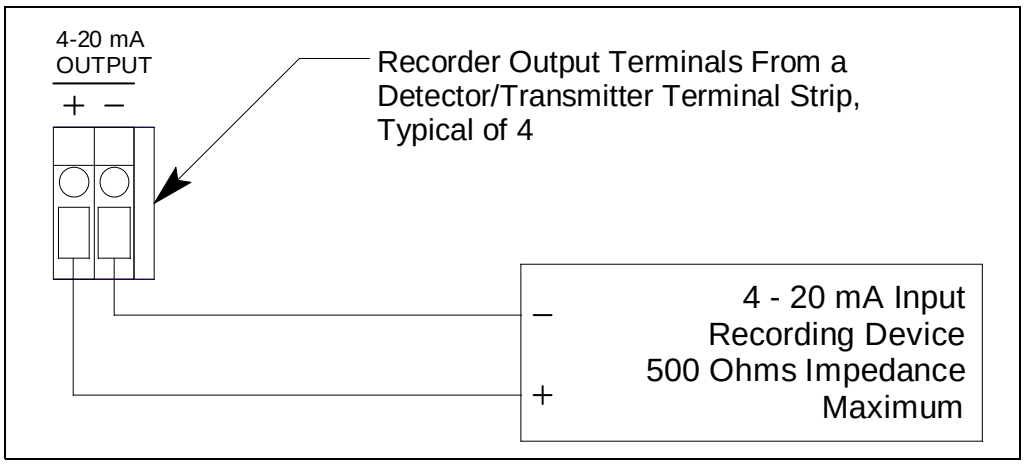

Figure 16: Recorder Output Wiring

1.888.610.7664 www.calcert.com sales@calcert.com

Making Fitting Connections

Compression Fitting Connections

The fresh air inlet, dryer exhaust, digester sample inlet, and compressed air inlet fittings are all compression fittings with ferrules that accept rigid metal or rigid plastic tubing. The tube nuts are loosely screwed on and are not tightened completely. Do not tighten the tube nut until a rigid tube is inserted.

The compression fittings accept 1/4 inch OD rigid metal or rigid plastic tubing. Stainless steel, Teflon, or polypropylene tubing is recommended.

NOTE: Rigid metal must be used to connect to the compressed air inlet compression fitting.

NOTE: Sample inlet pressure must be less than 150 psi. If your sample inlet pressure is higher than that, you must regulate it down.

The maximum lengths of tubing that can be connected to each compression fitting, the recommended size, and the recommended material are outlined in the table below.

Table 4: Compression Fitting Maximum Tubing Lengths

Fitting	Maximum Tubing Length (ft.)	Recommended Tubing Size	Recommended Tubing Material
Fresh Air Inlet	100	• 1/4 inch OD x 3/16 inch ID plastic • 1/4 inch OD x 0.035 inch wall metal	Stainless steel, Teflon, or polypropylene
Digester Sample Inlet	100	• 1/4 inch OD x 3/16 inch ID plastic • 1/4 inch OD x 0.035 inch wall metal	Stainless steel, Teflon, or polypropylene
Dryer Exhaust*	50	• 1/4 inch OD x 3/16 inch ID plastic • 1/4 inch OD x 0.035 inch wall metal	Stainless steel, Teflon, or polypropylene
Compressed Air Inlet	Determine length based on installation	1/4 inch OD tubing rated for pressure supplied	Stainless steel, copper, or aluminum
** It is not necessary to route the dryer exhaust away from the digester, but it may be done if desired.*			

Compressed Air Inlet Fitting and Compressed Air Filter/Water Trap

1. A filter/water trap must be installed in the compressed air inlet line as close to the Digester Gas Monitor as possible. The filter/water trap has compression fittings for connection. The filter/water trap is not factory installed and must be field installed. It is shipped separately from the Digester Gas Monitor. Rigid metal tubing is recommended for compressed air inlet fitting connections.

1.888.610.7664 www.calcert.com sales@calcert.com

2. If the filter/water trap will be installed where it's unlikely to be bumped, the metal tubing is strong enough to support the filter/water trap. If it's likely that the filter/water trap will be bumped, it should be mounted to a wall as close to the Digester Gas Monitor as possible using screws and the filter/water trap's bracket.
3. Install a short length of 1/4 inch OD rigid metal tubing that will connect the compressed air inlet fitting to the filter/water trap into the tube nut and ferrules of the compressed air inlet fitting on the Digester Gas Monitor.

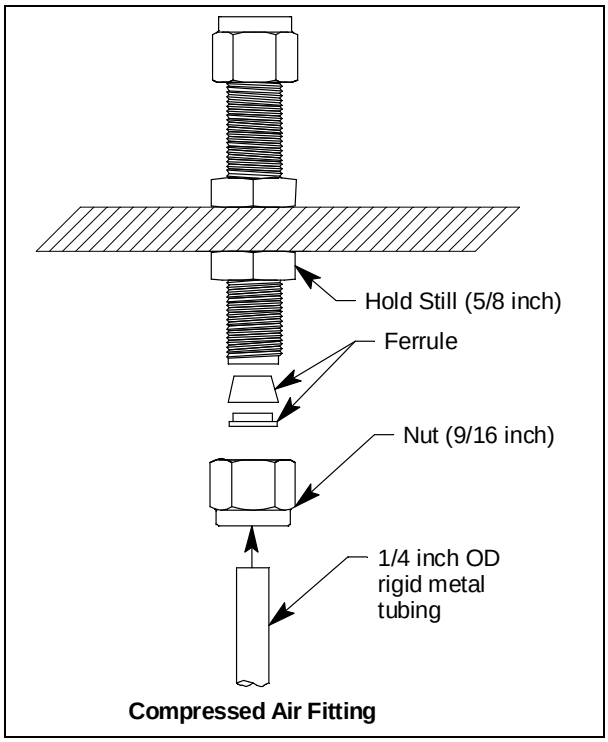

Figure 17: Compressed Air Inlet Fitting Connection

4. Before tightening the nut, be sure to hold the fitting still from the outside so it does not rotate using a 5/8 inch open-end wrench or an adjustable wrench (see Figure 17). While holding the fitting still, firmly tighten the nut with a 9/16 inch open-end wrench or an adjustable wrench so the ferrules crimp onto the sample tubing and make a seal.
5. Connect the other end of the tubing coming from the compressed air inlet fitting to the filter/water trap exhaust. Be sure that the arrow on the top of the filter/water trap is facing toward the compressed air inlet fitting. Use a 5/8 inch open-end wrench or an adjustable wrench to hold the filter/water trap still and use a 9/16 inch open-end wrench or an adjustable wrench to firmly tighten the nut so the ferrules crimp onto the tubing and make a seal.

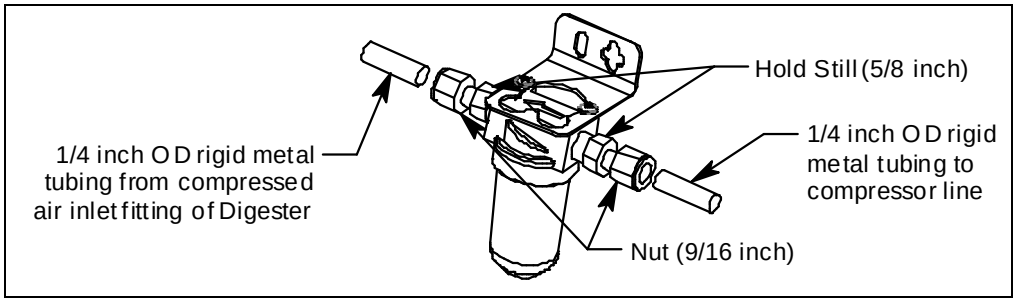

Figure 18: Compressed Air Filter/Water Trap

1.888.610.7664 www.calcert.com sales@calcert.com

6. Install the desired length of 1/4 inch OD rigid metal tube from the compressed air source into the tube nut and ferrules on the other side of the filter/water trap.

NOTE: The compressed air used for the Digester Gas Monitor must be dry (free from humidity). If wet air is used, at low temperatures, the moisture in the air may freeze in the aspirator and cause the Digester Gas Monitor to function improperly.

Use a 5/8 inch open-end wrench or an adjustable wrench to hold the filter/water trap still and use a 9/16 inch open-end wrench or an adjustable wrench to firmly tighten the nut so the ferrules crimp onto the tubing and make a seal.

7. The filter/water trap is self-draining. If the Digester Gas Monitor is not installed in an area where the water trap can drain onto the ground, install a length of 1/8 inch ID tubing onto the barb fitting on the bottom of the filter/water trap and route it to a bucket.
8. The Digester Gas Analyzer uses a maximum of 63 liters of compressed air per cycle when the maximum allowable tubing lengths are installed. The minimum flow regulator output pressure required when no sample lines are installed is 25 psi. The minimum flow regulator output pressure required when the maximum recommended sample line lengths are installed is 45 psi. The maximum compressed air supply pressure is 140 psi. Be sure that your compressed air source has sufficient capacity, sufficient pressure, and be sure that the compressed air sample is clean and/or filtered. RKI Instruments recommends a 3 gallon, 100 psi compressor minimum. Connect the compressor line to the rigid tubing coming from the compressed air filter/water trap.

1.888.610.7664 www.calcert.com sales@calcert.com

NOTE: Sample inlet pressure must be less than 150 psi. If your sample inlet pressure is higher than that, you must regulate it down.

1. Install the desired length of 1/4 inch OD rigid metal or rigid plastic tube into the tube nut and ferrules as shown in the figure below. Stainless steel, Teflon, or polypropylene tubing is recommended.

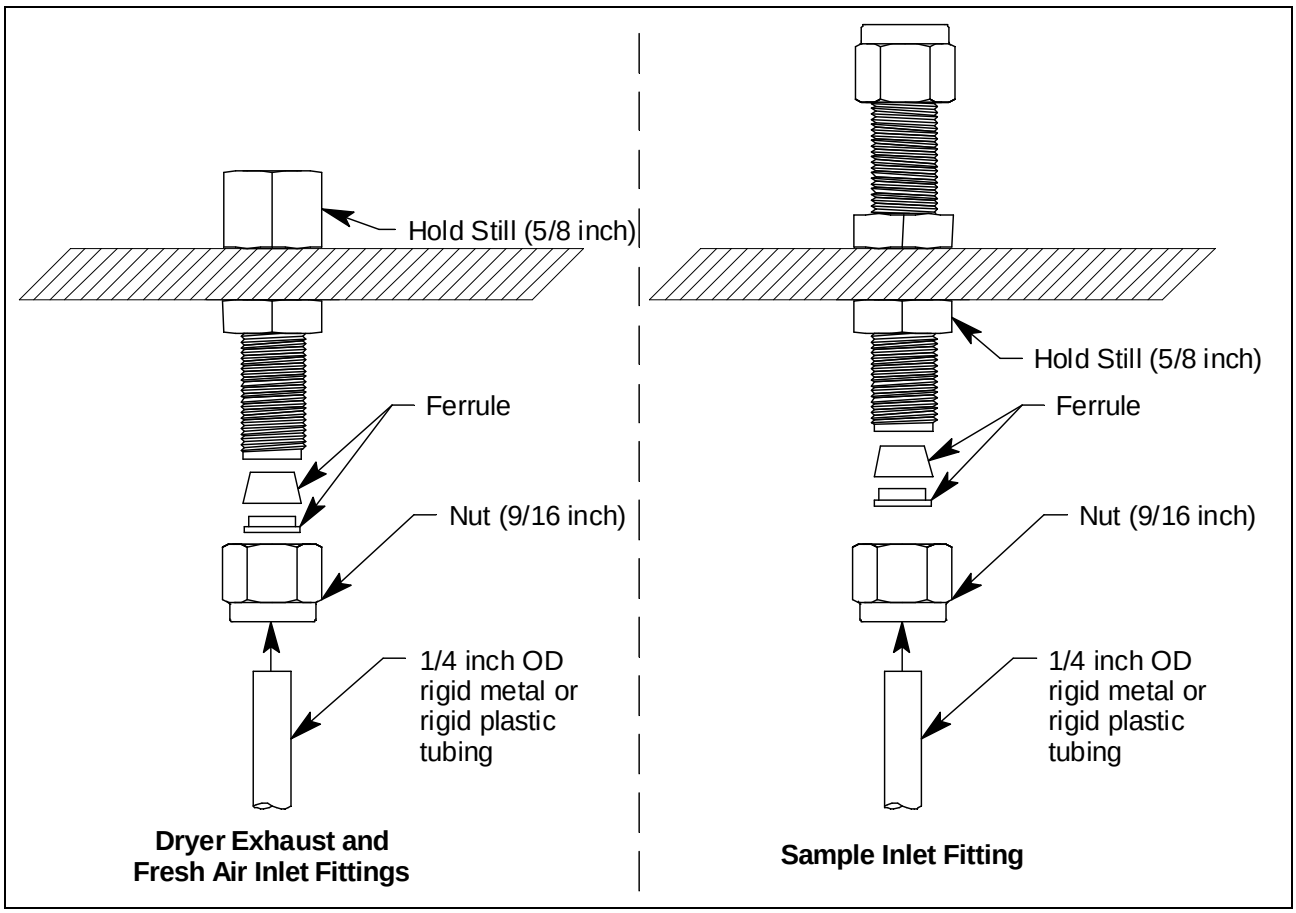

Figure 19: Compressed Fitting Connection

2. Before tightening the nut, be sure to hold the fitting still so it does not rotate using a 5/8 inch open-end wrench or an adjustable wrench. The dryer exhaust and fresh air inlet fittings will have to be held from the inside of the housing while the sample inlet fitting will have to held from the outside (see Figure 19). While holding the fitting still, firmly tighten the nut with a 9/16 inch open-end wrench or an adjustable wrench so the ferrules crimp onto the sample tubing and make a seal.
3. Route the tubing to the desired area. The fresh air inlet tubing needs to routed to a fresh air environment while the digester sample inlet needs to be routed to the desired sampling area.

NOTE: If the Digester Gas Monitor is installed in a cold area, the sample line will need to be heated in order to prevent condensation and possible freezing of the moisture in the gas sample line or Digester Gas Monitor.

1.888.610.7664 www.calcert.com sales@calcert.com

Hose Barb Connection

1. The aspirator/sample/blowback exhaust discharges aspirator exhaust, sample exhaust, and contents from the filters and water trap. It will contain corrosive gas and particulate or liquid discharge. For this reason, the aspirator/sample/blowback exhaust needs to be routed into a container in a fresh air area where it may be safely discharged.
2. Connect up to 100 feet of 1/4 inch ID flexible tube to the aspirator/sample/blowback exhaust fitting and route it to a container in a fresh air area.

WARNING: ***The aspirator/sample/blowback exhaust may contain high levels of toxic gases, including dangerous levels of H_2S. It is important to route the exhaust to a fresh air area where there is no danger of it being inhaled.***

Starting Up the Digester Gas Monitor

Perform the following procedure to place the Digester Gas Monitor into normal operation.

NOTE: The following screens illustrate a four-channel Digester Gas Monitor. Depending on what version of the Digester Gas Monitor you have, your screens may appear slightly different.

---

1. Complete the mounting and wiring procedures described earlier in this chapter.
2. Verify that all wiring connections are correct and secure and that the Digester Gas Monitor's power switch is in the OFF position.
3. Plug in or turn on the incoming power source (AC or DC).
4. Turn on the power switch if AC power is used as primary power.
5. The following screen appears for a few seconds.

```
RKI Instruments
Beacon 410
Digester Gas Monitor
```

6. The Version Screen then appears. It shows the instrument's hardware and firmware versions for a few seconds. **HW** is the hardware version. **Main** is the main firmware version. **MB** is the Modbus firmware version. The version numbers on the bottom line are the firmware versions loaded for each channel.

```
VERSION INFO
HW:  0002
Main:    D002      MB: 0001
  D001   D001   D001   D001
```


1.888.610.7664 www.calcert.com sales@calcert.com

To keep the version information screen on the display longer than a few seconds, press and hold the ENTER button while it is being displayed. When you release the ENTER button, the startup sequence will continue.

7. After the Version Screen has been displayed for a few seconds, **WARMING UP** appears for each active channel. The warm-up time is counted down in seconds from 60 seconds for each active channel on the far right.

```
1: Warming Up        60
2: Warming Up        60
3: Warming Up        60
4: Warming Up        60
```

NOTE: To prevent unwanted alarms during warm up, the alarm circuits are not active while the **WARMING UP** message is displayed.

8. Any unused channels are configured as **NOT USED** in the Configuration Menu at the factory. For any unused channels, **NOT USED** is displayed on the line for that channel. If any channels have been configured as **STANDBY** in the Configuration Menu, **STANDBY** is displayed on the line for that channel. See "Viewing and Changing Channel Parameters" on page 59 for a description of the **NOT USED** and **STANDBY** configurations.
9. Verify that the PILOT light is on. If the PILOT light is not on, see the troubleshooting guide in "Troubleshooting" on page 86.
10. When the warm-up period is complete, the Digester Gas Monitor enters a 60 second standby period. The display will alternate between the fresh air reading and the time left before the first detection cycle begins. During this initial standby period, you can perform a calibration if needed. See "Performing a Calibration" on page 71 for instructions. In addition, you may enter any of the Digester Gas Monitor's setup menus during this time.

```
Standby Mode
# of Samples  0
Next Detection Cycle
in  0D:  0H:  0M:  59S
```

```
1: METHANE      0 %VOL
2: OXYGEN    20.9 %VOL
3: CO2        0.0 %VOL
4: H2S          0 ppm
```

NOTE: If you enter Calibration Mode or one of the setup menus during the initial 60 second standby period, the 60 second count is paused and resumes once you exit Calibration Mode or the setup menu.

11. Once the initial 60 second standby period has passed, the Digester Gas Monitor begins a detection cycle with a pre-sample purge. For more description of the sampling cycle, see "Detection Cycle" on page 43. During this first cycle, the flow rates must be set during the sampling period as described in the next section and in "Detection Cycle" on page 43. If you are unable to set the flow rates during the initial cycle, a manual cycle must be initiated.

1.888.610.7664 www.calcert.com sales@calcert.com

Adjusting the Flow Rates

The flow rates during a detection cycle are factory set but may require adjustment after the installation of the fresh air inlet, calibration gas inlet, blow back exhaust, digester sample, and aspirator/sample exhaust lines. In addition, because of differences between the sample inlet restriction and the calibration inlet restriction, the flow rates may need adjustment during a calibration. Follow this procedure if you notice that your flow rates are not correct. Before adjusting flow rates, be sure that all inlet and/or exhaust lines are connected to the appropriate fitting on the bottom of the housing.

The sample regulator, located in the upper left corner of the Digester Gas Monitor, is factory set and shouldn't need adjustment. If the sample regulator does need to be adjusted, loosen the nut holding it in place and then turn the adjustment knob.

If the flow rates need adjustment, they must be set during the sample period of a detection cycle or during a calibration procedure. If the flow rates need adjustment during calibration, the flow rates must be set again during the next sample period.

The Flow to Sensors flowmeter should always read 3.0 SCFH. The flow rate value for the H_2S Dilution Sample and H_2S Dilution Air flowmeters depend on the detection range of the H_2S channel. The table below outlines the flowrate that each flowmeter should read for the available H_2S detection ranges.

The H_2S Dilution Sample flowmeter's units are "mm" instead of "SCFH".

Table 5: Flow Rates for Different H_2S Ranges

H_2S Range	Flow to Sensors Flowmeter	H2S Dilution Sample Flowmeter		H2S Dilution Air Flowmeter
		mm Value	Actual Flow	
0 - 500 ppm	3.0 SCFH	61	0.4 SCFH	1.2 SCFH
0 - 1000 ppm	3.0 SCFH	50	0.3 SCFH	1.0 SCFH
0 - 3000 ppm	3.0 SCFH	44	0.25 SCFH	1.2 SCFH
0 - 5000 ppm	3.0 SCFH	36	0.2 SCFH	1.4 SCFH

1. Use the knob on the flow regulator in the bottom left corner of the Digester Gas Monitor to adjust the Flow to Sensors flowmeter in the upper right corner to 3.0 SCFH.
2. Use the flowmeter knobs on the H_2S Dilution Sample flowmeter in the left center of the Digester Gas Monitor and the H_2S Dilution Air flowmeter in the right center of the Digester Gas Monitor to set the flowmeters to the appropriate value for the detection range as outlined in Table 5 (see Figure 3 on page 15 for the locations of the flowmeters).
3. If you cannot set the flow rates low enough, loosen the nut on the sample regulator and turn the sample regulator knob counterclockwise until you are able to set the flow rates. Tighten the nut to hold the adjustment in place.

1.888.610.7664 www.calcert.com sales@calcert.com

Chapter 4: Operation

Overview

This chapter describes the Digester Gas Monitor in normal operation. This chapter also describes the Digester Gas Monitor in alarm 1, alarm 2, alarm 3, and fail conditions, and suggests responses to these conditions.

Normal Operation

Normal operation is defined as follows:

- the start-up procedure is complete.
- the Digester Gas Monitor is not indicating an alarm 1, alarm 2, alarm 3, or fail condition.
- the Digester Gas Monitor is not running in one of the selection menus or Calibration Mode.

During normal operation, the Digester Gas Monitor will perform a detection cycle as often as the sample interval dictates. In between detection cycles, the Digester Gas Monitor is in Standby Mode and the display will alternate between the last recorded gas reading for all active channels and the time left until the next detection cycle occurs. The example below illustrates a typical Digester Gas Monitor channel allocation.

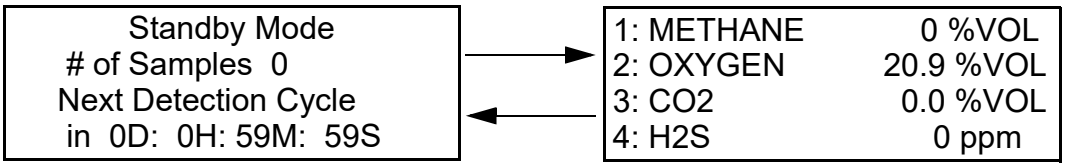

The PILOT LED is on indicating that the Digester Gas Monitor is receiving incoming power.

Detection Cycle

The Digester Gas Monitor performs a detection cycle as often as the Cycle Interval Time parameter in the Global Menu dictates. During a detection cycle, the Digester Gas Monitor locks out the ability to enter other operational modes or menus, such as Calibration Mode. The Digester Gas Monitor must be in Standby Mode in order to enter other operational modes or menus.

A detection cycle can be manually started at any time while the Digester Gas Monitor is in Standby Mode by pressing and holding the ENTER button for 5 seconds. Forcing a detection cycle does not reset the time left until another scheduled detection cycle begins. The next scheduled detection cycle happens on schedule.

1.888.610.7664 www.calcert.com sales@calcert.com

NOTE: If a forced detection cycle overlaps the start time of a scheduled detection cycle, that scheduled detection cycle will begin immediately after the forced detection cycle is complete. The next scheduled detection cycle will occur on schedule. The time between the first scheduled detection cycle that occurred immediately following the forced detection cycle and the next scheduled detection cycle will be shorter than if the manual detection cycle had not been initiated and the first scheduled detection cycle had been allowed to occur.

Each cycle uses a maximum of 63 liters of compressed air. This section describes the sequence of a detection cycle.

1. A 60 second pre-sample fresh air purge is performed.

```
Pre-Sample Purge
 0 Min 59 Seconds
```

2. A fresh air adjustment is performed on all installed sensors.

```
Zero Adjustment
In Process. . .
```

3. The fresh air readings will be displayed followed by the result of the fresh air adjustment.

```
1: METHANE        0 %LEL
2: OXYGEN      20.9 %VOL
3: CO2          0.0 %VOL
4: H2S            0 ppm
```

```
1: PASSED
2: PASSED
3: PASSED
4: PASSED
```

NOTE: If a channel is set to **NOT USED** in the Configuration Menu, “INACTIVE” will be displayed for that channel during the fresh air adjustment.

4. A 105 second sampling period is performed.

```
Sampling
1 Min 45 Seconds
```

NOTE: If adjusting the flow rates as described in “Adjusting the Flow Rates” on page 42, it must be done during the first 90 seconds of this 105 second sampling period while sample is flowing to the sensors.

1.888.610.7664 www.calcert.com sales@calcert.com

5. The H_2S reading is taken after 90 seconds. The solenoids will click and the flow to the sensors will be stopped for 15 seconds to allow for a stabilization period. The countdown will continue on the display.

```
Sampling
0 Min 14 Seconds
```

6. At the end of the stabilization period, the methane, oxygen, and carbon dioxide readings will be taken. The gas readings for all channels will then be displayed for 5 seconds.

```
1: METHANE      34 %LEL
2: OXYGEN      0.9 %VOL
3: CO2        15.3 %VOL
4: H2S         678 ppm
```

7. A 60 second post-sample purge will then be performed to clear the Digester Gas Monitor of any residual sample.

```
Fresh Air Purge
0 Min 59 Seconds
```

8. A 10 second blowback period follows the post-sample purge. The blowback clears the hydrophobic filter and the water trap of any contaminants.

```
Blow Back
0 Min  9 Seconds
```

9. Once the blow back operation is complete, the Digester Gas Monitor will return to Standby Mode. The gas readings displayed will be the last recorded gas readings at the end of the sample period described in step 4.

```
Standby Mode
# of Samples  0
Next Detection Cycle
in  0D:  0H: 59M:  59S
```

```
1: METHANE      0 %VOL
2: OXYGEN    20.9 %VOL
3: CO2        0.0 %VOL
4: H2S          0 ppm
```

10. The detection cycle will occur again in a time period defined by the Cycle Interval Time in the Global Menu.

1.888.610.7664 www.calcert.com sales@calcert.com

4 - 20 mA Signal Output Operation

The output at the recorder output terminals on the detector/transmitter terminal strip for each channel is a 4 - 20 mA signal that corresponds to the detection range of the Digester Gas Monitor. It behaves as follows:

- During the Digester Gas Monitor's initial 1 minute warm-up period and 1 minute standby period after being turned on, the signal output will be fixed at 3.5 mA.
- For the first pre-sample purge after the Digester Gas Monitor is turned on, the signal output will be fixed at 3.5 mA.
- For all pre-sample purge operations after the first presample purge, the output will be fixed at the last recorded reading from the previous detection cycle.
- During the sampling period, the signal output will track the sensor readings.
- During the post sample purge and the blowback operations, the output will be fixed at the recorded reading of the cycle.
- During the standby period between detection cycles, the output will be fixed at the last recorded reading from the previous detection cycle.
- If you enter the Global Menu, the Configuration Menu, the Input Setup Menu, the Modbus Menu, or Calibration Mode, the signal output will be fixed at 3.5 mA until the Digester Gas Monitor returns to normal operation.
- If the Digester Gas Monitor's input power decreases below 18.5 volts so that the Digester Gas Monitor is in a low power alarm, the signal output is fixed at 2.4 mA until the low power alarm is cleared.
- If the Digester Gas Monitor goes into a fail condition, after a 30 second delay, the signal output is fixed at approximately 0.7 mA until the fail alarm is cleared. During the 30 second delay, the output follows the detector output.

Viewing and Resetting Min/Max Readings

The reset switch may be used to view and reset the minimum and maximum gas readings for all active channels.

1. While the Digester Gas Monitor is in Standby Mode, press and hold the reset switch button for 5 seconds.
2. The display will show the following screen for about ten seconds.

1:	0	45
2:	0.8	20.9
3:	0	500
4:	5.0	37.0

The minimum reading is on the left and the maximum is on the right for each channel.

1.888.610.7664 www.calcert.com sales@calcert.com

3. After the minimum and maximum readings have been displayed for about ten seconds, the following screen appears for about seven seconds.

```
Push  Reset  Again  To
Reset   Min/Max   Values
Or   Wait   To   Return   To
Normal       Operation
```

- To reset the minimum and maximum readings, before the unit returns to Standby Mode press and release the reset switch button. The display indicates **Min/Max Values Have Been Reset** and the monitor will then return to Standby Mode.
- To return to Standby Mode without resetting the minimum and maximum readings, do not press the reset switch button and allow the unit to return to Standby Mode.

Battery Charging (Optional)

The Digester Gas Monitor has an optional backup battery charging feature. In order for this feature to be included, the Digester Gas Monitor must be ordered with this feature. Consult RKI Instruments, Inc. for ordering information.

The battery charging circuit is designed to charge lead acid type batteries. If AC power is used as primary power and a backup battery is connected to the Digester Gas Monitor‘s EXT DC/24V BATT terminals as shown in Figure 14 on page 33, the battery charging feature will charge the battery if it is depleted and keep it charged with a charge current of approximately 100 mA.

CAUTION: *When a battery is used as backup power and the charging feature is included in the Digester Gas Monitor, do not use a non-rechargeable battery or a backup battery that has its own charging feature. Use RKI backup battery 49-8104RK or an appropriately rated 24 VDC rechargeable lead acid type battery to backup a Digester Gas Monitor when the battery charging feature is included in the Digester Gas Monitor.*

Alarm Indications

Gas alarms can occur at any point during the sampling period of the detection cycle. If the gas presence was momentary and disappears quickly, the alarm indications will still be active when alarms are set as latching (factory setting). In this case, the alarm indications can be acknowledged and reset at any point during the detection cycle or while in Standby Mode. If the gas was still present at the end of the sampling period, the alarm indications can be acknowledged at any point but the alarm cannot be reset until the sampling period of the next detection cycle.

This section describes the Digester Gas Monitor in alarm 1, alarm 2, alarm 3 and fail conditions, and suggests responses to these conditions. Table 6 below lists the alarm indications for each condition.

1.888.610.7664 www.calcert.com sales@calcert.com

NOTE: The Digester Gas Monitor's alarms are factory set in such a way that it is unlikely that an alarm condition will be encountered but the Digester Gas Monitor allows the configuration of various alarm and alarm relay parameters. The description of alarm indications below assumes that all parameters are at their factory set values. It also assumes that the alarm setpoints are set such that alarm 1< alarm 2 < alarm 3 and all alarms are increasing.

See "Viewing and Changing Channel Parameters" on page 59 for detailed information on displaying or changing various channel parameters including alarm and alarm relay parameters. Table 8 on page 61 lists the adjustable parameters and their factory settings.

NOTE: The Digester Gas Monitor's oxygen alarms are factory set as increasing.

Table 6: Visual and Audible Alarm Indications

Condition	Cause	Visual Indication(s)	Audible Indication
Alarm 1	Increasing gas reading at or above the alarm 1 setpoint	• Alarm 1 LED is on • Gas reading alternates with **ALARM-1** message • If installed and set to activate for alarm 1, horn/strobe flashes NOTE: The oxygen channel has a 30 second alarm delay built in for Alarm 1. Any indications related to the oxygen channel will not initiate until 30 seconds has passed since the Alarm 1 condition occurred.	• Buzzer sounds a pulsing tone • If installed and set to activate for an alarm 1 condition, the horn/strobe sounds a pulsing tone
Alarm 2	Increasing gas reading at or above the alarm 2 setpoint	• Alarm 1 and alarm 2 LEDs are on • Gas reading alternates with **ALM 1,2** message • If installed, horn/strobe continues to flash if set to activate for alarm 1. If set to activate for alarm 2 only, it begins to flash when an alarm 2 condition begins.	• Buzzer sounds a pulsing tone • If installed, the horn/strobe continues to sound a pulsing tone if set to activate for alarm 1. If set to activate for alarm 2 only, it begins to sound a pulsing tone when an alarm 2 condition begins.
Alarm 3	Increasing gas reading at or above the alarm 3 setpoint	• Alarm 1, alarm 2, and alarm 3 LEDs are on • Gas reading alternates with **ALM 1,2,3** message • If installed, horn/strobe continues to flash if set to activate for alarm 1 and/or alarm 2. If set to activate for alarm 3 only, it begins to flash when an alarm 3 condition begins.	• Buzzer sounds a pulsing tone • If installed, the horn/strobe continues to sound a pulsing tone if set to activate for alarm 1 and/or alarm 2. If set to activate for alarm 3 only, it begins to sound a pulsing tone when an alarm 3 condition begins.

1.888.610.7664 www.calcert.com sales@calcert.com

Table 6: Visual and Audible Alarm Indications

Condition	Cause	Visual Indication(s)	Audible Indication
Fail	• Disconnected or misconnected detector wiring • Display reading below -10% of full scale or lower • Malfunctioning components	• Fail LED is on • **FAIL** message replaces the gas reading • If installed and set to activate for fail, horn/strobe flashes NOTE: There is a 30 second delay on the fail indications.	• Buzzer sounds a steady tone • If installed and set to activate for a fail condition, the horn/strobe sounds a pulsing tone
Flow Fail	Flow to system falls below 1.6 SCFH	• Display alternates between **FLOW FAIL** and normal screen • If installed, the horn/strobe activates • A 60 second fresh air purge is initialized • Flow through system will be stopped	• Buzzer sounds a steady tone • If installed, the horn/strobe sounds a pulsing tone
Low Battery	No AC power **and** DC power source (primary or backup) less than 18.5 volts.	• FAIL LED is on • Display shows **LOW POWER STANDBY** message and the input DC voltage	None

NOTE: You can set the channel alarm relays to be either all normally energized or all normally de-energized in the Global Menu. The following sections describe the factory settings of normally de-energized for the channel relays. The fail relay is factory-set as normally energized and is not user adjustable. See "Viewing and Changing Global Parameters" on page 55 for instructions to change the channel alarm relays.

Alarm 1 Condition

This section describes the indications for an alarm 1 condition and suggests responses to an alarm 1 condition.

Alarm 1 Condition Indications

When the gas reading of an active channel reaches the alarm 1 setpoint, the Digester Gas Monitor senses an alarm 1 condition. The Digester Gas Monitor alerts you to an alarm 1 condition as follows:

- the alarm 1 LED turns on
- the gas reading in alarm 1 condition alternates with the **ALARM-1** message
- the buzzer sounds a pulsing tone
- the applicable alarm 1 channel relay energizes
- if installed and set to activate in an alarm 1 condition, the horn/strobe flashes and sounds a pulsing tone

NOTE: The oxygen alarm 1 condition has a 30 second factory set delay. The delay may be changed in the Configuration Menu.

1.888.610.7664 www.calcert.com sales@calcert.com

Responding to an Alarm 1 Condition

This section suggests the following responses to an alarm 1 condition:

1. Follow your established procedure for a low-level combustible or toxic gas condition or an increasing oxygen condition.
2. An alarm condition can be acknowledged at any point during the detection cycle or during Standby Mode. To acknowledge the alarm condition and silence the buzzer while in an alarm 1 condition, press and release the reset switch. The alarm 1 LED will begin to flash indicating the alarm condition has been acknowledged. You cannot de-energize the alarm 1 relays until the gas reading falls below the alarm 1 setpoint during the sampling period of a detection cycle.
3. Alarms are factory set as latching. After the gas reading falls below the alarm 1 setpoint during the sampling period of a detection cycle, press and release the reset switch to reset the alarm 1 circuit. Resetting the alarm 1 circuit silences the buzzer (if the alarm has not been acknowledged), turns off the alarm 1 LED, resets the display for the channel(s) in alarm, turns off the horn/strobe if it is installed and set to activate for alarm 1, and de-energizes the channel alarm 1 relays.

NOTE: The Digester Gas Monitor saves the last gas reading taken during the sample period of a detection cycle. If the gas reading is still above the alarm 1 setpoint at the end of the sampling period, that gas reading is saved and the alarm 1 circuit cannot be reset. The reading must fall below the alarm 1 setpoint during the sampling period of a detection cycle before the alarm 1 circuit can be reset.

Alarm 2 Condition

This section describes the indications for an alarm 2 condition and suggests responses to an alarm 2 condition.

Alarm 2 Condition Indications

When the gas reading of an active channel reaches the alarm 2 setpoint, the Digester Gas Monitor senses an alarm 2 condition. The Digester Gas Monitor alerts you to an alarm 2 condition as follows:

- the ALARM 2 LED turns on
- the gas reading during an alarm 2 condition alternates with the **ALM 1,2** message
- the buzzer sounds a pulsing tone
- the applicable alarm 2 channel relay energizes
- if installed and set to activate for alarm 1, the horn/strobe continues to flash and sound a pulsing tone
- if installed and set to activate for alarm 2 only, the horn/strobe begins to flash and sound a pulsing tone when an alarm 2 condition begins

Responding to an Alarm 2 Condition

This section suggests responses to an alarm 2 condition.

1. Follow your established procedure for a high-level combustible or toxic gas condition, or an increasing oxygen condition.
2. An alarm condition can be acknowledged at any point during the detection cycle or during Standby Mode. To acknowledge the alarm condition and silence the buzzer while in an alarm 2 condition, press and release the reset switch. The alarm 2 LED will begin to flash indicating the alarm

1.888.610.7664 www.calcert.com sales@calcert.com

condition has been acknowledged. You cannot de-energize the alarm 2 relays until the gas reading falls below the alarm 2 setpoint.

3. Alarms are factory set as latching. After the gas reading falls below the alarm 2 setpoint during a detection cycle, press and release the reset switch to reset the alarm circuit. Resetting the alarm circuit silences the buzzer (if the alarm has not been acknowledged) turns off the alarm 2 LED, resets the display for the channel(s) in alarm, turns off the horn/strobe if it is installed and set to activate for alarm 2 only, and de-energizes the channel alarm 2 relays.

NOTE: The Digester Gas Monitor saves the last gas reading taken during the sample period of a detection cycle. If the gas reading is still above the alarm 1 setpoint at the end of the sampling period, that gas reading is saved and the alarm 1 circuit cannot be reset. The reading must fall below the alarm 1 setpoint during the sampling period of a detection cycle before the alarm 1 circuit can be reset.

Alarm 3 Condition

This section describes the indications for an alarm 3 condition and suggests responses to an alarm 3 condition.

NOTE: The factory set configuration of the Digester Gas Monitor does not assign channel relay contacts to the alarm 3 condition.

Alarm 3 Condition Indications

When the gas reading of an active channel reaches the alarm 3 setpoint, the Digester Gas Monitor senses an alarm 3 condition. The Digester Gas Monitor alerts you to an alarm 3 condition as follows:

- the alarm 3 LED turns on
- the gas reading during an alarm 3 condition continues to flash and alternates with the **ALM 1,2,3** message
- the buzzer sounds a pulsing tone
- if installed and set to activate for alarm 1 and alarm 2, the horn/strobe continues to flash and sound a pulsing tone
- if set to activate for alarm 3 only, the horn/strobe begins to flash and sound a pulsing tone when an alarm 3 condition begins

Responding to an Alarm 3 Condition

This section suggests responses to an alarm 3 condition.

1. Follow your established procedure for a high-level combustible or toxic gas condition, or an increasing oxygen condition.
2. An alarm condition can be acknowledged at any point during the detection cycle or during Standby Mode. To acknowledge the alarm condition and silence the buzzer while in an alarm 3 condition, press and release the reset switch. The ALARM 3 LED will begin to flash indicating the alarm condition has been acknowledged.
3. Alarms are factory set as latching. After the gas reading falls below the alarm 3 setpoint during a detection cycle, press and release the reset switch to reset the alarm circuit. Resetting the alarm circuit silences the buzzer (if the alarm has not been acknowledged) and turns off the ALARM 3

1.888.610.7664 www.calcert.com sales@calcert.com

LED.

NOTE: The Digester Gas Monitor saves the last gas reading taken during the sample period of a detection cycle. If the gas reading is still above the alarm 1 setpoint at the end of the sampling period, that gas reading is saved and the alarm 1 circuit cannot be reset. The reading must fall below the alarm 1 setpoint during the sampling period of a detection cycle before the alarm 1 circuit can be reset.

Fail Condition

This section describes the indications for a fail condition and suggests responses to a fail condition.

Fail Condition Indications

The Digester Gas Monitor senses a fail condition for any of the following:

- the detector wiring is disconnected or incorrectly connected;
- the display reading is -10% of full scale or lower;
- the Digester Gas Monitor or one of its detectors is malfunctioning.

When the Digester Gas Monitor senses a fail condition, it alerts you as follows:

- the fail LED turns on;
- the gas reading for the failing channel is replaced by the **FAIL** message;
- the buzzer sounds a steady tone;
- the common fail relay de-energizes;
- if installed and set to activate for a fail condition, the horn/strobe begins to flash and sound a pulsing tone when the fail condition begins.

NOTE: The fail alarm has a 30 second delay that is not user adjustable.

Responding to a Fail Condition

This section suggests responses to a fail condition.

1. Verify that the detector wiring is correctly and securely connected.
2. See the troubleshooting guide in “Troubleshooting” on page 86.

Flow Fail Condition

This section describes the indications for a flow fail condition and suggest responses to a flow fail condition.

Flow Fail Condition Indications

The Digester Gas Monitor senses a flow fail condition when:

- the flow to the sensors falls below 1.6 SCFH.

When the Digester Gas Monitor senses a flow fail condition, it alerts you as follows:

- a 30 second fresh air purge is initiated and the display reads Flow Fail Purge and counts down from 30 seconds;

1.888.610.7664 www.calcert.com sales@calcert.com

- the buzzer sounds a steady tone;
- if installed and set to activate for a fail condition, the horn/strobe is activated;
- the common fail relay de-energizes;
- the flow to the sensors is stopped;
- After the purge is completed, a sample sequence is initiated. If the low flow condition recurs during this sample period, the Digester Gas Monitor will stop sampling and wait for user intervention.

Responding to a Flow Fail Condition

This section suggests responses to a flow fail condition.

1. During the 60 second purge, press and release the reset button to silence the buzzer and the horn/strobe (if the Fail Silence parameter in the Global Menu is set to **CAN SILENCE FAIL**).
2. If 2 detection cycles in a row experience a flow fail, verify that nothing is blocking the inlet lines.
3. If a flow fail occurs for a second consecutive detection cycle, the Digester Gas Monitor will wait for user intervention. Press and release the reset button once to silence the buzzer and once again to reset the LED and the relay. The Digester Gas Monitor will enter a 60 second standby period and then begin a new detection cycle.

   If the cause of the flow fail has been cleared and the flow is normal during the second detection cycle, a new standby period is started at the end of the detection cycle.
4. See “Troubleshooting” on page 86.

Low DC Power Condition

This section describes the audible and visual indications for a low DC power condition and suggests responses to a low DC power condition. This condition only occurs when DC power is used as the primary or a backup power source.

Low DC Power Condition Indications

The Digester Gas Monitor senses a low DC power condition when the DC power source is 18.5 volts or less.

WARNING: While in a low power condition, the Digester Gas Monitor is not an active gas monitor.

When the Digester Gas Monitor senses a low DC power condition, it alerts you as follows:

- The FAIL LED turns on.
- The fail relay and all other relays are de-energized.
- The message **LOW POWER S STANDBY** is indicated on the top line of the LCD and the input voltage is displayed on the bottom line of the LCD.

NOTE: The low DC power alarm cannot be cleared using the reset switch.

When the DC input voltage increases to 19.0 volts, the low DC power alarm is cleared and the Digester Gas Monitor will begin its warm-up sequence.

1.888.610.7664 www.calcert.com sales@calcert.com

Responding to a Low DC Power Condition

- If DC power is the **primary** power source:
  1. For a *temporary* DC power source, disconnect primary DC power at the Digester Gas Monitor, then connect a 24 VDC battery.
  2. Determine and correct the cause of primary DC power loss. When the DC power source rises above 19.0 volts, the Digester Gas Monitor begins the warm up process.
  3. Verify that the Digester Gas Monitor enters normal operation after its warm-up sequence.
- If DC power is the **backup** power source:
  1. If a non-rechargeable battery is used for backup, replace the battery.
  2. Determine and correct the cause of primary AC power loss. When backup DC or primary AC power is restored, the Digester Gas Monitor begins the warm up process.

     If the Digester Gas Monitor was purchased with the battery charging feature, when AC power is restored, the Digester Gas Monitor charges the backup battery with a charge current of approximately 100 mA until it is fully recharged. Charge time varies depending on the battery size and how much the battery was depleted. Once the battery is fully charged, the Digester Gas Monitor maintains the charge with the 100 mA charge current.
  3. Verify that the Digester Gas Monitor enters normal operation after its warm-up sequence.

1.888.610.7664 www.calcert.com sales@calcert.com

Chapter 5: Global Menu

Overview

This chapter describes how to view and change Digester Gas Monitor instrument parameters using the Global Menu. The global parameters are the cycle interval time setting, the optional horn/strobe's installation setting, the relay normal state setting, the alarm buzzer silence setting, and the fail silence setting. The Global Menu is accessed using the ESCAPE and UP/YES control switches.

The Global Menu includes a 5-minute timeout feature. If you do not press a control switch for 5 minutes, the Digester Gas Monitor automatically returns to Standby Mode.

NOTE: If the Digester Gas Monitor returns to Standby Mode because of a timeout, it enters a warm-up period just as it does when it is first turned on.

If you are installing a new Digester Gas Monitor, it has been set up at the factory. Use the Global Menu only if you want to change the instrument parameter factory settings.

Viewing and Changing Global Parameters

WARNING: ***The Digester Gas Monitor is not an active gas monitoring device while in the Global Menu. When you enter the Global Menu, the 4-20 mA output signal will "freeze" at 3.5 mA for each active channel, all relays and alarm LEDs will remain in their current state at the time that you entered the Global Menu, and the alarm buzzer and strobe will turn off if they were activated until you exit the Global Menu. The 4 - 20 mA output signal will not indicate current readings and the relays and alarm LEDs will not resume operating normally until the Digester Gas Monitor is in normal operation again.***

NOTE: You must set the instrument parameters to the desired settings using the Global Menu before making any changes to the channel parameters in the Configuration Menu. Settings in the Global Menu influence what channel parameters appear in the Configuration Menu.

1. While in Standby Mode, press and hold the ESCAPE and UP/YES buttons for approximately 5 seconds to enter the Global Menu. Release the buttons when the **You Have Entered the GLOBAL Menu** message appears.

```
You  Have  Entered  The
      GLOBAL Menu

Continue?  [Y / N]
```


1.888.610.7664 www.calcert.com sales@calcert.com

2. Press and release the UP/YES button to continue in the Global Menu to the Cycle Interval Time screen.

```
Cycle Interval Time:

1  HOUR
UP / DN  then ENT / ESC
```

3. Use the UP/YES and DOWN/NO buttons to set the cycle interval time. It can be set to 15 minutes, 1 hour, 4 hours, 8 hours, or 24 hours.
4. Press ENTER to save the changes and continue to the STROBE Installation screen.

```
STROBE Installation:

STROBE IS INSTALLED
UP / DN then ENT / ESC
```

5. Use the UP/YES and DOWN/NO buttons to toggle between NO STROBE INSTALLED and STROBE INSTALLED.
6. Press ENTER to save the changes and continue to the Normal Relay States screen. Press the ESCAPE button to go back to the Cycle Interval Time screen.
7. The Normal Relay States screen will be displayed.

```
NORMAL  RELAY  STATES:

NORM DE-ENERGIZED
UP / DN then ENT / ESC
```

8. Use the UP/YES and DOWN/NO buttons to toggle between NORM ENERGIZED and NORM DE-ENERGIZED.
9. Press ENTER to save the changes and continue to the Alarm Buzzer Silence screen. Press the ESCAPE button to go back to the STROBE Installation Screen.

```
ALARM BUZZ SILENCE:

CAN SILENCE BUZZER
UP / DN then ENT / ESC
```

10. Use the UP/YES and DOWN/NO buttons to toggle between CAN SILENCE BUZZER and CAN’T SILENCE BUZZER.

1.888.610.7664 www.calcert.com sales@calcert.com

11. Press ENTER to save the changes and continue to the Fail Silence screen. Press the ESCAPE button to go back to the Alarm Buzzer Silence Screen.

```
FAIL SILENCE:

  CAN SILENCE FAIL
UP / DN then ENT / ESC
```

12. Use the UP/YES and DOWN/NO buttons to toggle between CAN SILENCE FAIL and CAN'T SILENCE FAIL.
13. Press ENTER to save the changes and move to the Save Settings screen. Press ESCAPE to go back to the ALARM BUZZ SILENCE screen.

```
Save Settings?

[Y / N]
[ESCAPE] to  back  up
```

14. To save the global parameter settings, press and release the UP /YES button.The screen will indicate that the Digester Gas Monitor is saving the settings for a few seconds then the Digester Gas Monitor will return to Standby Mode.

    If you do not want to save the global parameter settings, press and release the DOWN/NO button. The display will indicate that no settings have been changed for a few seconds then the Digester Gas Monitor will return to Standby Mode.

Table 7 below lists the global parameters that can be configured in the Global Menu along with the factory set value for each parameter.

Table 7: Global Menu Parameters

Global Parameter (Factory-Set Value)	Description
Cycle Interval Time (1 hour)	The Cycle Interval Time is the length of time between the beginning of scheduled detection cycles. It can be set to 15 minutes, 1 hour, 4 hours, 8 hours, or 24 hours.
STROBE Installation (Factory setting depends on whether a horn/strobe is supplied with the Digester Gas Monitor.)	If set to **STROBE IS INSTALLED**, the strobe circuitry is functional and items in the Configuration Menu that apply to the horn/strobe operation become active. If set to **NO STROBE INSTALLED**, the strobe circuitry does not function and items in the Configuration Menu that apply to the horn/strobe operation do not appear.

1.888.610.7664 www.calcert.com sales@calcert.com

Table 7: Global Menu Parameters (Continued)

Global Parameter (Factory-Set Value)	Description
NORMAL RELAY STATES (NORM DE-ENERGIZED)	If set to **NORM DE-ENERGIZED**, the gas alarm relays are de-energized in normal operation and energize when the appropriate alarm circuit is activated. The NO (normally open) relay contacts are open during non-alarm operation and close when the appropriate alarm condition occurs. The NC (normally closed) relay contacts are closed during non-alarm operation and open when the appropriate alarm condition occurs. If set to **NORMALLY ENERGIZED**, the gas alarm relays are energized in normal operation and de-energize when the appropriate alarm circuit is activated. The NO (normally open) relay contacts are closed during non-alarm operation and open when the appropriate alarm condition occurs. The NC (normally closed) relay contacts are open during non-alarm operation and close when the appropriate alarm condition occurs. NOTE: The fail relay is factory set as normally energized and is not field adjustable.
ALARM BUZZ SILENCE (CAN SILENCE BUZZER)	If set to **CAN SILENCE BUZZER**, the buzzer can be silenced by pressing and releasing the reset switch when the Digester Gas Monitor is in a gas alarm condition. If set to **CAN'T SILENCE BUZZEZR**, the buzzer cannot be silenced by the reset switch while the Digester Gas Monitor is in a gas alarm condition.
FAIL SILENCE (CAN SILENCE FAIL)	If set to **CAN SILENCE FAIL**, the buzzer and optional horn/strobe (if STROBE Installation is set to STROBE IS INSTALLED) can be silenced by pressing and releasing the reset switch when the Digester Gas Monitor is in a fail condition. If set to **CAN'T SILENCE FAIL**, the buzzer and optional horn/strobe (if STROBE Installation is set to STROBE IS INSTALLED) cannot be silenced by the reset switch while the Digester Gas Monitor is in a fail condition.

1.888.610.7664 www.calcert.com sales@calcert.com

Chapter 6: Configuration Menu

Overview

This chapter describes how to view and change Digester Gas Monitor channel parameters including alarm point settings and channel relay settings using the Configuration Menu. The Configuration Menu is accessed using the ESCAPE and ENTER control switches.

The Configuration Menu includes a 5-minute timeout feature. If you do not press a control switch for 5 minutes, the Digester Gas Monitor automatically returns to Standby Mode.

NOTE: If the Digester Gas Monitor returns to Standby Mode because of a timeout, it enters a warm-up period just as it does when it is first turned on.

If you are installing a new Digester Gas Monitor, it has been set up at the factory. Use the Configuration Menu only if you want to change one or more channel's parameter factory settings. If you want to change a channel's detector type see "Chapter 7: Input Setup Menu" on page 65.

Viewing and Changing Channel Parameters

WARNING: ***The Digester Gas Monitor is not an active gas monitoring device while in the Configuration Menu. When you enter the Configuration Menu, the 4-20 mA output signal will "freeze" at 3.5 mA for each active channel, all relays and alarm LEDs will remain in their current state at the time that you entered the Configuration Menu, and the alarm buzzer and strobe will turn off if they were activated until you exit the Configuration Menu. The 4 - 20 mA output signal will not indicate current readings and the relays and alarm LEDs will not resume operating normally until the Digester Gas Monitor is in normal operation again.***

1. While in Standby Mode, simultaneously press and hold the ESCAPE and ENTER buttons for approximately 5 seconds to enter the Configuration Menu. Release the buttons when the **You Have Entered the CONFIGURATION Menu** message appears on the display.

```
You  Have  Entered  The
CONFIGURATION Menu

Continue?  [Y / N]
```


1.888.610.7664 www.calcert.com sales@calcert.com

2. Press and release the UP/YES button to continue in the Configuration Menu to the Select Channel Screen.

```
Select   Channel

                1
UP / DN then ENT / ESC
```

3. Use the UP/YES or DOWN/NO buttons to select the channel whose parameters you want to view and/or update, then press and release the ENTER button. The first channel parameter screen appears and it allows you to select whether the channel is set to **ACTIVE**, **STANDBY**, or, **NOT USED**.

```
CHANNEL:  1

            ACTIVE
UP / DN then ENT / ESC
```

4. Press and release the UP /YES or DOWN/NO button until the setting you want to select appears, then press and release the ENTER button to save it. The next channel parameter screen appears.

NOTE: If you selected STANDBY or NOT USED, the display will ask you if you still want to review the channel settings. If yes, press and release the UP/YES button and continue with step 5. If no, press and release the DOWN/NO button and proceed to step 9.

NOTE: Use the ESCAPE button to go backwards in the menu.

---

5. In the parameter screens, use the ENTER button to accept a displayed parameter setting and proceed to the next parameter or the ESCAPE button to back up a screen.
6. If you want to change a displayed parameter setting, use the UP/YES or DOWN/NO button to change the parameter to the desired setting, then press and release the ENTER button to accept the change and proceed to the next screen. The available parameters are listed below in Table 8.
7. Continue through the parameter setting screens changing any parameter settings as needed until the following message appears on the display.

```
Save Settings?

[Y / N]
[ESCAPE] to  back  up
```

8. To save the channel parameter settings, press and release the UP /YES button.The screen will indicate that the Digester Gas Monitor is saving the settings for a few seconds.

   If you do not want to save the channel parameter settings, press and release the DOWN/NO button. The display will indicate that no settings have been changed for a few seconds and the channel parameters will return to their original settings.

1.888.610.7664 www.calcert.com sales@calcert.com

9. The following screen will appear asking if you want to configure more channels.

```
Do  You  Want  To
Do  More  Channels?

[Y / N]
```

If yes, press and release the UP/YES button to return to the Select Channel Screen. Begin at step 3 above to configure another channel.

If no, then press the DOWN /NO button to return to Standby Mode.

Table 8 below lists the channel parameters that can be viewed and updated in the Configuration Menu along with the factory set value for each parameter.

Table 8: Configuration Menu Parameters

Channel Parameter (Factory-Set Value)	**Description**
Channel Status (Factory setting depends on what detectors are factory installed.)	If set to **ACTIVE**, the channel will be fully functional. If set to **STANDBY**, the channel's gas name and reading will be replaced by **STANDBY** on the display. The channel's relays will be fixed in their non-alarm state and the 4 - 20 mA output for the channel will be fixed at 3.5 mA. This setting is typically used when maintenance is being performed on a channel. If set to **NOT USED**, the channel is not functional and the gas name and reading field for that channel indicates **NOT USED**. All the channel's relays are de-energized and the 4 - 20 mA output is fixed at about 0.7 mA.
Strobe Setting (USE w/ Alarms Only)	If set to **USE w/ Alarms Only**, the strobe will activate when the appropriate gas alarm condition occurs as defined in the alarm strobe settings (see below) in the Configuration Menu. It will not operate when a fail alarm occurs. If set to **USE w/ Alarms and Fail**, the strobe will activate when the appropriate gas alarm condition occurs and when a fail alarm occurs. If set to **DON'T USE**, none of the strobe alarm settings appear in the Configuration menu and the strobe circuit does not function. * ***This parameter appears only if the*** STROBE Installation ***parameter in the Global Menu is set to*** **Strobe Installed.**
Alarm-1 Level (Methane: 100 %volume Oxygen: 4 %volume H_2S: 1000 ppm CO_2: 50 %volume)	The gas reading at which an alarm 1 condition occurs and the Digester Gas Monitor activates the alarm 1 circuit for this channel.
Alarm-1 Inc/Dec (INCREASING)	Indicates if the alarm 1 circuit is activated by gas reading **INCREASING** or **DECREASING** to the alarm 1 level.

1.888.610.7664 www.calcert.com sales@calcert.com

Table 8: Configuration Menu Parameters (Continued)

Channel Parameter (Factory-Set Value)	Description
Alarm-1 Latching (LATCHING)	If set as **LATCHING**, you must press the RESET button to reset the alarm 1 circuit after the alarm 1 condition passes. If set as **SELF-RESETTING**, the Digester Gas Monitor automatically resets the alarm 1 circuit after the alarm 1 condition passes.
Alarm-1 ON Delay (30 seconds for oxygen, 1 second for all other channel types)	The amount of time the Digester Gas Monitor delays activation of the alarm 1 circuit after the gas reading reaches the alarm 1 setpoint.
ALM-1 STROBE Setting (NonResettable STROBE)	If set to **Resettable STROBE**, the strobe can be turned off with the Reset Switch while an alarm 1 condition still exists. If set to **NonResettable STROBE**, the strobe cannot be turned off with the Reset Switch while an alarm 1 condition still exists. If set to **NO STROBE**, the strobe will not activate due to an alarm 1 condition. * ***This parameter appears only if the*** STROBE Installation ***parameter in the Global Menu is set to*** **Strobe Installed** ***and the*** Strobe Setting ***parameter in the Configuration Menu is set to*** **USE w/ Alarms Only** ***or*** **USE w/ Alarms and Fail.**
Alarm-2 Level (Methane: 100 %volume Oxygen: 25 %volume H_2S: 1000 ppm CO_2: 50 %volume)	The gas reading at which an alarm 2 condition occurs and the Digester Gas Monitor activates the alarm 2 circuit for this channel.
Alarm-2 Inc/Dec (INCREASING)	Indicates if the alarm 2 condition is activated by gas readings **INCREASING** or **DECREASING** to the alarm 2 level.
Alarm-2 Latching (LATCHING)	If set as **LATCHING**, you must press the RESET button to reset the alarm 2 circuit after the alarm 2 condition passes. If set as **SELF-RESETTING**, the Digester Gas Monitor automatically resets the alarm 2 circuit after the alarm 2 condition passes.
Alarm-2 ON Delay (1 Second)	The amount of time the Digester Gas Monitor delays activation of the alarm 2 circuit after the gas reading reaches the alarm 2 setpoint.
ALM-2 STROBE Setting (NonResettable STROBE)	If set to **Resettable STROBE**, the strobe can be turned off with the Reset Switch while an alarm 2 condition still exists. If set to **NonResettable STROBE**, the strobe cannot be turned off with the Reset Switch while an alarm 2 condition still exists. If set to **NO STROBE**, the strobe will not activate due to an alarm 2 condition. * ***This parameter appears only if the*** STROBE Installation ***parameter in the Global Menu is set to*** **Strobe Installed** ***and the*** Strobe Setting ***parameter in the Configuration Mode is set to*** **USE w/ Alarms Only** ***or*** **USE w/ Alarms and Fail.**

1.888.610.7664 www.calcert.com sales@calcert.com

Table 8: Configuration Menu Parameters (Continued)

Channel Parameter (Factory-Set Value)	Description
Alarm-3 Level (Methane: 100 %volume Oxygen: 25 %volume H_2S: 1000 ppm CO_2: 50 %volume)	The gas reading at which an alarm 3 condition occurs and the Digester Gas Monitor activates the alarm 3 circuit for this channel.
Alarm-3 Inc/Dec (INCREASING)	Indicates if the alarm 3 circuit is activated by gas readings **INCREASING** or **DECREASING** to the alarm 3 level.
Alarm-3 Latching (LATCHING)	If set as **LATCHING**, you must press the RESET button to reset the alarm 3 circuit after the alarm 3 condition passes. If set as **SELF-RESETTING**, the Digester Gas Monitor automatically resets the alarm 3 circuit after the alarm 3 condition passes.
Alarm-3 ON Delay (1 Second)	The amount of time the Digester Gas Monitor delays activation of the alarm 3 circuit after the gas reading reaches the alarm 3 setpoint.
ALM-3 STROBE Setting (NonResettable STROBE)	If set to **Resettable STROBE**, the strobe can be turned off with the Reset Switch while an alarm 3 condition still exists. If set to **NonResettable STROBE**, the strobe cannot be turned off with the Reset Switch while an alarm 3 condition still exists. If set to **NO STROBE**, the strobe will not activate due to an alarm 3 condition. * ***This parameter appears only if the*** STROBE Installation ***parameter in the Global Menu is set to*** **Strobe Installed** ***and the*** Strobe Setting ***parameter in the Configuration Mode is set to*** **USE w/ Alarms Only** ***or*** **USE w/ Alarms and Fail.**
Relay-1 Assignment (ALARM-1)	The alarm condition that activates relay 1. It can be set for activation by the following alarm conditions: • ALARM-1 • ALARM-2 • ALARM-3 • ALARMS 1 or 2 • ALARMS 1 or 3 • ALARMS 2 or 3 • ALARMS 1, 2, or 3 • Use As Channel FAIL (If you choose this setting, the relay is normally energized)

1.888.610.7664 www.calcert.com sales@calcert.com

Table 8: Configuration Menu Parameters (Continued)

Channel Parameter (Factory-Set Value)	Description
Relay-2 Assignment (ALARM-2)	The alarm condition that activates relay 2. It can be set for activation by the following alarm conditions: • ALARM-1 • ALARM-2 • ALARM-3 • ALARMS 1 or 2 • ALARMS 1 or 3 • ALARMS 2 or 3 • ALARMS 1, 2, or 3 • Use As Channel FAIL (If you choose this setting, the relay is normally energized)
NOISE FILTER (5 seconds)	The noise filter feature helps "smooth out" jumpy or noisy signals from the detector. The filter setting indicates the number of seconds over which the displayed reading is being averaged. You can set the noise filter from 1 second to 10 seconds. A setting of 10 seconds produces the greatest amount of smoothing, but causes the displayed gas reading to respond more slowly to changes in gas concentrations. A setting of 1 second gives the fastest gas reading response to a change in gas concentration, but gives the least amount of smoothing.
Deadband (0.5% **oxygen** for oxygen channels; 2.0% of **Full Scale** in terms of the channel's units for all other channel types.)	The deadband setting defines the first gas concentration that will be displayed when the gas reading increases or decreases from the normal fresh air concentration (20.9 for oxygen and 0 for all other channel types). This feature helps prevent "jumpy" readings near the normal fresh air reading. For example, if the zero suppression setting is **2 %LEL** for a combustible channel whose range is 0 - 100% LEL, the Digester Gas Monitor will display a reading of 0 %LEL for gas readings from -1 %LEL to 1 %LEL.

1.888.610.7664 www.calcert.com sales@calcert.com

Chapter 7: Input Setup Menu

Overview

This chapter describes how to use the Input Setup Menu to select each channel's detector input type and the gas setup. The detector input type determines whether a direct connect type or a 4 - 20 mA type of detector will be used and the gas setup determines the target gas, detection units, and the detection range full scale. The Input Setup Menu is accessed using the ENTER control switch when powering up the Digester Gas Monitor.

The Input Setup Menu includes a 5-minute timeout feature. If you do not press a button for 5 minutes, the Digester Gas Monitor automatically returns to Standby Mode.

NOTE: The Digester Gas Monitor will begin its warm-up sequence when it exits the Input Setup Menu before it enters Standby Mode for both a program timeout or because you are done with input setup and are exiting manually.

Selecting the Detector Head Input Type and Gas Setup

NOTE: The Digester Gas Monitor must be turned off before you can enter the Input Setup Menu. If your Digester Gas Monitor is already installed and operating, make sure that turning the Digester Gas Monitor off will not cause unwanted alarms before continuing.

1. While the Digester Gas Monitor is off, press and hold the ENTER button, then turn on the Digester Gas Monitor with the ON/OFF switch.
2. Continue to press the ENTER button while the Digester Gas Monitor turns on and the display shows **RKI Instruments Beacon 410 Digester Gas Monitor**. Release the ENTER button when the following screen appears on the display.

```
You  Have  Entered  The
INPUT SETUP Menu

Continue?  [Y / N]
```

3. If you want to exit the Input Setup Menu, press and release the DOWN/NO button. The Digester Gas Monitor will exit the Input Setup Menu and begin the warm-up sequence.

   If you want to continue in the Input Setup Menu, press and release the UP/YES button. The Select Channel(s) screen will appear.

```
Select  Channel

                1
UP / DN then ENT / ESC
```

4. The setup that you perform will apply to all the channels that you select. Select the channel or channels you want to setup by using the UP/YES or DOWN/NO buttons to scroll through the

1.888.610.7664 www.calcert.com sales@calcert.com

choices and then press and release the ENTER button to accept the selection. The INPUT Type screen will appear. In the example below, channels 1 has been selected for setup.

```
CHANNEL(S):  1
INPUT  Type
          RWGB  Direct
UP / DN then ENT / ESC
```

5. Use the UP/YES or DOWN/NO button to scroll through the choices of input types. Table 9 below lists the choices of input type for the Digester Gas Monitor.

Table 9: Digester Gas Monitor Detector Input Types

Detector Head Input Type	Description
4-20 mA TRANSMITTER	A **4-20 mA TRANSMITTER** detector head is connected to the Digester Gas Monitor with 2 or 3 wires, depending on the detector head model, using the AMP +, S, and - terminals on the detector/transmitter terminal strips. All calibration adjustments are made at the detector head.
PREAMP DIRECT	A **PREAMP DIRECT** detector head is connected to the Digester Gas Monitor with 2 wires using the AMP + and S terminals on the detector/transmitter terminal strips. All calibration adjustments are made at the Digester Gas Monitor.
OXYGEN DIRECT (25%)	An **OXYGEN DIRECT** detector head is an oxygen detector head in which the oxygen detector is wired to the Digester Gas Monitor with 2 wires using the OXY W (white) and G (green) terminals from on the detector/transmitter terminal strips. All calibration adjustments are made at the Digester Gas Monitor.
RWGB DIRECT	An **RWGB DIRECT** detector head is a detector head in which the detector is wired to the Digester Gas Monitor with 4 wires using the LEL R (red), W (white), G (green) and B (black) terminals on the detector/transmitter terminal strips. All calibration adjustments are made at the Digester Gas Monitor. This type of detector head is typically a combustible gas LEL detector head, but may be another type such as a CO_2 detector.

6. When the desired detector head input type is shown on the display, press and release the ENTER button to accept it.
   - If you select an input type other than oxygen direct, the PreDefined Gas Setup screen will appear.

```
CHANNEL(S):  1
PreDefined  Gas  Setup
    METHANE  100  %LEL
UP / DN then ENT / ESC
```

   - If you select the oxygen direct input type, the Save Settings? screen will appear. Proceed to step 11.

1.888.610.7664 www.calcert.com sales@calcert.com

7. Use UP/YES or DOWN/NO button to scroll through the gas setup choices. There are several choices whose gas name, full scale, and detection units are predefined. For these choices, the gas name, full scale, and detection units are displayed. There is also one choice named **CUSTOM** that allows you to enter the gas name, full scale, and detection units.
8. When the desired setup choice is shown on the display, press and release the ENTER button to accept it.

   If you selected a predefined gas setup, the Save Settings? screen will appear. Proceed to step 11.

   If you selected the **CUSTOM** choice, the Gas Name screen will appear. Proceed to step 9.

NOTE: The **CUSTOM** choice is especially useful if you are connecting a 4 - 20 mA transmitter to the Digester Gas Monitor that is not a gas detector, such as a temperature or pressure transducer.

---

9. If you selected the **CUSTOM** choice, perform the following steps to define the gas name, detection units, and full scale.
   - With the Gas Name screen displayed, use the UP/YES or DOWN/NO button to scroll through the gas name choices. The list includes one choice called **Spell It**. This choice allows you to enter a name that is not on the list.
   - When the desired choice is displayed, press and release the ENTER button.

     If you selected a gas name, the Gas Units screen appears.

     If you selected **Spell It**, a screen appears that indicates **Currently, Gas Name Is Spelled As:**. If the displayed name is OK, press and release the UP/YES button and the Gas Units screen appears. If you want to change the displayed name, perform the following steps to enter the desired gas name.
     - Press and release the DOWN/NO button. The top display line indicates **Spell Out Gas Name**.
     - An eight character wide text field appears on the left side of the third display line enclosed by single quotes. A vertical cursor appears below the far left text position indicating that this character position can be edited. Use the UP/YES or DOWN/NO button to scroll through the character choices. When the desired character is displayed, press and release the ENTER button to save that character and move to the next position. Use the ESCAPE button to return to a previous character if you want to change it.
     - Repeat the previous step until all the text positions are saved. After the last character is saved, the Units screen appears.

```
CHANNEL(S):  1
Units
                %LEL
UP / DN then ENT / ESC
```


1.888.610.7664 www.calcert.com sales@calcert.com

- Use the UP/YES or DOWN/NO button to scroll through the units choices. When the desired units are displayed, press and release the ENTER button. The Full Scale Readout screen appears.

```
CHANNEL(S):  1
Full  Scale  Readout
            100  %LEL
UP / DN then ENT / ESC
```

- USE the UP/YES or DOWN/NO button to scroll through the available choices for the full scale setting. When the desired full scale setting is displayed, press and release the ENTER button.

10. The Save Settings? screen appears.

```
Save Settings?

[Y / N]
```

11. If you do not want to save the setup, press and release the DOWN/NO button. You will return to the Select Channel(s) screen.

```
Select Channel

                1
UP / DN then ENT / ESC
```

Follow the instructions from step 4 above.

If you want to save the setup, press and release the UP/YES button. The display will indicate that the settings have been saved before asking if you want to setup more channels.

NOTE: If you defined a custom setup by selecting the **CUSTOM** choice in the PreDefined Gas Setup screen, you will be required to review the channel parameters from the Configuration Menu. See "Viewing and Changing Channel Parameters" on page 59 for a description of the channel parameters.

---

12. If you do not want to setup more channels, press and release the DOWN/NO button and the Digester Gas Monitor will exit the Input Setup Menu and begin its warm-up sequence.

If you want to setup more channels, press and release the UP/YES button. You will return to the Select Channel(s) screen.

```
Select Channel

                1
UP / DN then ENT / ESC
```

Follow the instructions from step 4 above.

1.888.610.7664 www.calcert.com sales@calcert.com

Chapter 8: Calibration Mode

Overview

This chapter describes how to calibrate the Digester Gas Monitor's active channels using Calibration Mode. In Calibration Mode, you can:

- Set the calibration timeout.
- Perform a fresh air adjust on selected channels.
- Perform a gas adjust on selected channels.

NOTE: The O_2 channel must be calibrated with 0 % O_2 to ensure low-end accuracy. All other channels must be calibrated with a gas concentration between 10% and 100% of the channel's full scale value (ie. the CO_2 channel must be calibrated with a CO_2 concentration between 5% and 50% volume).

- View Max Spans.

Table 10 below briefly describes the four operations that can be performed in Calibration Mode. A more detailed description of each operation is given later in this chapter.

Table 10: Calibration Mode Functions

Operation	Description
SET CAL TIMEOUT	The calibration timeout sets the amount of time after the last button push while in Calibration Mode that the Digester Gas Monitor will wait before automatically returning to Standby Mode.
PERFORM AIR ADJUST	This operation allows you to set the fresh air reading of the selected channel(s) to zero (20.9% for the oxygen channel).
PERFORM GAS ADJUST	This operation allows you to set the response reading of the selected channels with calibration gas.
VIEW MAX SPANS	This operation gives a measure of how much gas response adjustment remains on a direct connect type channel by allowing you to view the maximum possible adjustment on gas during the most recent calibration for each channel.

Calibration Frequency

Although there is no particular calibration frequency that is correct for all applications, a calibration frequency of every month is adequate for most Digester Gas Monitor applications. Unless experience in a particular application dictates otherwise, RKI Instruments, Inc. recommends a calibration frequency of every 3 months.

If an application is not very demanding, for example detection in a clean, temperature controlled

1.888.610.7664 www.calcert.com sales@calcert.com

environment where a combustible or toxic gas is not normally present, and calibration adjustments are minimal at calibration, then a calibration frequency of every 6 months may be adequate.

If an application is very demanding, for example if a combustible or toxic gas is present often and in significant concentrations or the environment is not well controlled, then more frequent calibration than every month may be necessary.

Entering Calibration Mode

WARNING: ***The Digester Gas Monitor is not an active gas monitoring device during the calibration procedure. When you enter Calibration Mode, the 4-20 mA output signal will "freeze" at 3.5 mA for each active channel, all relays and alarm LEDs will remain in their current state at the time that you entered Calibration Mode, and the alarm buzzer and strobe will turn off if they were activated until you exit Calibration Mode. The 4 - 20 mA output signal will not indicate current readings and the relays and alarm LEDs will not resume operating normally until the Digester Gas Monitor is in normal operation again.***

1. While in Standby Mode, simultaneously press and hold the ENTER and UP/YES buttons for approximately 3 seconds to enter Calibration Mode. Release the buttons when the **You Have Entered The CALIBRATION Mode...** message displays and asks if you want to continue in the Calibration Menu.

```
You  Have  Entered  The
   CALIBRATION Mode

Continue?  [Y / N]
```

2. If you want to exit Calibration Mode, press and release the DOWN/NO button. The Digester Gas Monitor will return to Standby Mode.

   If you want to continue in Calibration Mode, press and release the UP/YES button to continue and display the Select Operation screen. The SET CAL TIMEOUT item will be displayed.

```
Select Operation

      SET CAL TIMEOUT
UP / DN then ENT / ESC
```

   The next two sections describe how to set the calibration timeout and calibrate the Digester Gas Monitor's detectors.

Calibration Timeout Setting

The calibration timeout setting defines the amount of time after the last button push that the Digester Gas Monitor will remain in Calibration Mode before automatically exiting Calibration Mode and entering Standby Mode. If the Digester Gas Monitor exits Calibration Mode because of the automatic timeout, it will begin its warm-up sequence just as it does when it is turned on.

To view or change the calibration timeout setting, do the following:

1. Navigate to the Select Operation Screen as described in the previous section.

1.888.610.7664 www.calcert.com sales@calcert.com

2. With **SET CAL TIMEOUT** displayed, press and release the ENTER button. The Calibration Timeout Screen appears.

```
Calibration Timeout

        15  minutes
UP / DN then ENT / ESC
```

3. Use the UP/YES or DOWN/NO button to adjust the calibration timeout to the desired setting. The calibration timeout can be set from 5 minutes to 240 minutes (4 hours) in 5 minute increments. The factory set calibration timeout is 15 minutes.
4. If you want to save the displayed calibration timeout setting, press and release the ENTER button. The display will indicate that the setting has been saved before returning to the Select Operation Screen.

   If you do not want to save the displayed calibration timeout setting, press and release the ESCAPE button. The display will indicate that nothing has changed before returning to the Select Operation Screen.
5. Press and release the ESCAPE button.The **You Have Entered The CALIBRATION Mode...** message displays and asks if you want to continue in Calibration Mode.
6. Press the DOWN/NO button to exit Calibration Mode and enter Standby Mode.

Performing a Calibration

It is possible to perform only an air adjustment or a gas response adjustment since it is not always necessary to perform a complete calibration. For example, during startup, it is typically only necessary to perform an air adjustment since the Digester Gas Monitor is shipped with all the factory setup channels calibrated. However, for a complete calibration, you must perform both a fresh air adjustment and a gas response adjustment.

The H_2S channel (typically channel 4) must always be calibrated separately from the other channels. The methane, oxygen, and CO_2 channels (typically channels 1-3) may be calibrated together or separately. **This means that the fresh air adjustment procedure and the gas adjustment procedure must each be completed at least twice in order to perform a complete calibration.**

To perform a calibration, you will need:

- known calibrating samples of the gases being detected

NOTE: The O_2 channel must be calibrated with 0 % O_2 to ensure low-end accuracy. All other channels must be calibrated with a gas concentration between 10% and 100% of the channel's full scale value (ie. the CO_2 channel must be calibrated with a CO_2 concentration between 5% and 50% volume).

WARNING: ***The H_2S concentration used to calibrate the H_2S channel is high enough to be dangerous if inhaled. Take all necessary precautions to avoid inhaling the H_2S calibration gas and make sure the Digester Gas Monitor's exhaust line is routed to an area where it can be safely exhausted. See "Hose Barb Connection" on page 40 for instructions to route the Digester Gas Monitor's aspirator/sample exhaust.***

1.888.610.7664 www.calcert.com sales@calcert.com

- a demand flow regulator
- non-absorbent tubing

Performing a Fresh Air Adjustment

Performing a fresh air adjustment sets the gas reading in fresh air for the selected channels to zero for all channel types except oxygen. The oxygen channel is set to 20.9% in fresh air.

To perform a fresh air adjustment for the selected channels, do the following:

1. Navigate to the Select Operation Screen as described in "Entering Calibration Mode" on page 70.
2. Use the UP/YES or DOWN/NO button to display **PERFORM AIR ADJUST** on the Select Operation Screen.

```
Select Operation

   PERFORM AIR ADJUST
UP / DN then ENT / ESC
```

3. Press and release the ENTER button. The Select Channel(s) screen appears.

```
Select Channel(s)
For FRESH AIR Adjust
                1
UP / DN then ENT / ESC
```

4. Use the UP/YES or DOWN/NO button to scroll through the channel combination choices and select the channel or channels that you will air adjust.
5. Press and release the ENTER button to accept the displayed choice and continue with the air adjustment. The Digester Gas Monitor will begin to draw sample through the Fresh Air Inlet. The display will alternate between the two screens shown below. In the example below, channels 1, 2, and 3 have been selected for an air adjust.

```
Apply FRESH AIR
To Gas Detectors
- > ENTER when Done
- > ESCAPE to Abort
```

```
1: METHANE        0 %VOL
2: OXYGEN      20.9 %VOL
3: CO2           0.0 %VOL
```

6. Confirm that the tubing installed at the Fresh Air Inlet fitting is routed to a fresh air area.
7. If necessary, adjust the flow rates as described in "Adjusting the Flow Rates" on page 42 before continuing. The flow rate must be set to 3 SCFH for channels 1, 2, and 3 or per Table 5 for channel 4 (H_2S).
8. Allow the Digester to draw fresh air for 1 minute.
9. Press and release the ENTER button. For methane, oxygen, and carbon dioxide channels, the solenoids will click and the flow to the sensors will be stopped for 15 seconds to allow for a stabilization period. The hydrogen sulfide channel does not need a stabilization period.
10. The Digester Gas Monitor will perform a fresh air adjustment and the display will indicate **AIR ADJUST PASSED** for each detector if the air adjust is successful. If the air adjust was not successful for any channel, the display will indicate **AIR ADJUST FAILED** for that channel. The Digester Gas Monitor will then return to the Select Operation screen.

1.888.610.7664 www.calcert.com sales@calcert.com

11. If you want to perform a gas adjustment to complete the calibration, proceed to the next section, “Performing a Gas Adjustment”.

    If you do not want to perform a gas adjustment, use the UP/YES and DOWN/NO buttons to scroll to **EXIT CAL MENU**. Press and release the ENTER button to exit Calibration Mode and return to Standby Mode.

Performing a Gas Adjustment

Performing a gas adjustment sets the response level to calibration gas for the selected channels. This is also known as a span adjustment.

To perform a gas adjustment for the selected channels, do the following:

1. Install the demand flow regulator onto the calibration cylinder.

WARNING: ***The H_2S concentration used to calibrate the H_2S channel is high enough to be dangerous if inhaled. Take all necessary precautions to avoid inhaling the H_2S calibration gas and make sure the Digester Gas Monitor’s exhaust line is routed to an area where it can be safely exhausted. See “Hose Barb Connection” on page 40 for instructions to route the Digester Gas Monitor’s aspirator/sample exhaust.***

---

2. Connect the sample tubing to the demand flow regulator.
3. Navigate to the Select Operation Screen as described in “Entering Calibration Mode” on page 70 or proceed to the next step if you just completed an air adjustment and are at the Select Operation Screen.
4. Use the UP/YES or DOWN/NO button to display **PERFORM GAS ADJUST** on the Select Operation Screen.

```
Select  Operation

   PERFORM GAS ADJUST
UP / DN then ENT / ESC
```

5. Press and release the ENTER button. The Select Channel(s) screen appears.

```
Select  Channel(s)
For  CAL  GAS  Adjust
                1
UP / DN then ENT / ESC
```

6. Use the UP/YES or DOWN/NO button to scroll through the channel combination choices and select the channel or channels that you will air adjust. In the gas adjustment example below, channels 1, 2, and 3 have been selected.
7. Press and release the ENTER button to accept the displayed choice and continue with the gas adjustment. The display will show the calibration gas concentration that the Digester Gas Monitor expects you to use for the gas adjustment for the first selected channel.

```
CHANNEL:  1
CAL  Gas  To  Be  Used
METHANE          50  %VOL
UP / DN then ENT / ESC
```


1.888.610.7664 www.calcert.com sales@calcert.com

8. Use the UP/YES and DOWN/NO buttons to make the displayed concentration match the calibration gas concentration, then press and release the ENTER button to accept it. The display will show the expected calibration gas concentration for the next selected channel.

NOTE: The O_2 channel must be calibrated with 0 % O_2 to ensure low-end accuracy. All other channels must be calibrated with a gas concentration between 10% and 100% of the channel's full scale value (ie. the CO_2 channel must be calibrated with a CO_2 concentration between 5% and 50% volume).

---

9. Repeat step 8 for each selected channel. When the last selected channel's calibration gas concentration has been accepted, the Digester Gas Monitor will begin to draw sample through the Calibration Gas Fitting. The two screens shown below will alternate.

```
Apply CAL GAS
To Gas Detectors
- > ENTER when Done
- > ESCAPE to Abort
```

```
1: METHANE      49 %VOL
2: OXYGEN      0.0 %VOL
3: CO2        15.3 %VOL
```

10. Connect the tubing from the demand flow regulator to the Calibration Gas Fitting.

NOTE: Verify that the calibration gas cylinder contains enough sample by checking the demand flow regulator gauge.

---

11. If necessary, adjust the flow rates as described in "Adjusting the Flow Rates" on page 42 before continuing. The flow rate must be set to 3 SCFH for channels 1, 2, and 3 or per Table 5 for channel 4 (H_2S).
12. Allow the Digester to draw calibration gas for 1 minute.
13. Press and release the ENTER button. For methane, oxygen, and carbon dioxide channels, the solenoids will click and the flow to the sensors will be stopped for 15 seconds to allow for a stabilization period. The hydrogen sulfide channel does not need a stabilization period.
14. The Digester Gas Monitor will perform a gas adjustment on the channels and indicate **GAS ADJUST PASSED** for each channel. If the gas adjustment was not successful for any channel, the display will indicate **GAS ADJUST FAILED** for that channel. The Digester Gas Monitor will then return to the Select Operation screen.
15. Disconnect the tubing from the Calibration Gas Fitting.
16. Unscrew the demand flow regulator from the calibration cylinder.
17. Repeat step 1 through step 16 for the other detector(s) you wish to calibrate.
18. Use the UP/YES and DOWN/NO buttons to scroll to **EXIT CAL MENU**. Press and release the ENTER button to exit Calibration Mode and return to Standby Mode.
19. Initiate a manual cycle and set the flow rates as described in "Adjusting the Flow Rates" on page 42.

NOTE: Be sure to set the sample flow rate after exiting Calibration Mode. If the sample flow rate is not set, the H_2S dilution ratio will not be correct.

1.888.610.7664 www.calcert.com sales@calcert.com

Viewing Maximum Spans

This operation allows you to see how much gas response adjustment remains after a calibration is performed. This is a useful gauge for whether or not a sensor is nearing the end of its life. When you enter the VIEW MAX SPANS screen, the Digester Gas Monitor displays the maximum possible adjustment that the Digester Gas Monitor could have made to the response reading with the calibration gas that was used for the most recent successful calibration. So if a 0 - 100 %LEL channel is calibrated using 50 %LEL gas and the maximum indicated span in the VIEW MAX SPANS screen is 95 %LEL, this means that there was enough adjustment left on that channel to set the reading to 95 %LEL when the detector was exposed to 50 %LEL gas. If the maximum span value is close to the calibration gas value, for example if it is 53 %LEL for a 0 - 100 %LEL channel when 50 %LEL calibration gas is used, the sensor should be replaced soon.

To make the maximum span values as meaningful as possible, there is a limit to how much remaining adjustment the screen will indicate. The maximum remaining adjustment that will be shown for any channel is 3 times the calibration gas concentration even if the Digester Gas Monitor could have adjusted it higher. For example, if 50% LEL gas was used to calibrate a 0 - 100 % LEL channel, the highest maximum span value that will be displayed is 150 %LEL. If the maximum span adjustment possible for a channel is more than 3 times the calibration gas value, a "+" sign will be displayed next to the maximum span value.

The maximum span values that are displayed are from the most recent successful calibration for each channel. So they are most useful soon after a calibration is performed. If an extended period of time, for example 2 or 3 months, has passed since the last successful calibration on a particular channel, the maximum span value for that channel may no longer be accurate.

To view the maximum span values, do the following:

1. Navigate to the Select Operation Screen as described in "Entering Calibration Mode" on page 70 or navigate to the Select Operation Screen after performing a calibration.
2. Use the UP/YES or DOWN/NO button to display **VIEW MAX SPANS** on the Select Operation Screen.

```
Select Operation

     VIEW  MAX  SPANS
UP / DN then ENT / ESC
```

3. Press and hold the ENTER button to display the maximum spans. In the example below, channels 1, 2, 3, and 4 are active.

```
1: METHANE        0+%VOL
2: OXYGEN        49.2  %VOL
3: CO2            0.0+%VOL
4: H2S              0  ppm
```

4. Release the ENTER button to return to the Select Operation screen.
5. Press and release the ESCAPE button to return to the initial Calibration Mode Screen that says **You Have Entered the CALIBRATION Menu...** and then press and release the DOWN/NO button to exit Calibration Mode and return to Standby Mode.

1.888.610.7664 www.calcert.com sales@calcert.com

Chapter 9: RS-485 Modbus Output

Overview

This chapter describes the Digester Gas Monitor's RS-485 Modbus output and how to configure the Digester Gas Monitor to make use of it. It also discusses how to wire the Digester Gas Monitor into a Modbus system.

The Digester Gas Monitor provides an RS-485 serial communications interface. It is a Modbus Slave Device, supporting 2-wire RS-485 Modbus RTU serial communications.

Wiring the Digester Gas Monitor in a Modbus System

The Digester Gas Monitor is a 2-wire Modbus RTU device. When wiring the Digester Gas Monitor into a Modbus system, adhere to standard Modbus wiring practices per the Modbus Over Serial Line Specification and Implementation Guide V1.0 or later.

The Modbus protocol supports a maximum of 247 unique slave addresses (1-247). The Digester Gas Monitor's line driver provides for up to 32 Digester Gas Monitors (or some combination of Digester Gas Monitors and other Modbus slave devices such as the RKI Instruments M2) to be connected together without the need for a repeater. Figure 21 & Figure 22 below illustrate typical Digester Gas Monitor wiring configurations. If more than 32 Digester Gas Monitors (or Digester Gas Monitors and other slave devices) need to be connected together, an RS-485 repeater(s) should be used such that no more than 32 Digester Gas Monitors reside on any given network segment.

The MODBUS terminals are located on the controller terminal strip (see Figure 3 on page 15). The following signals are available at the Modbus terminals:

Table 11: Modbus Terminal Signals

Modbus Terminal Label (RS-485 Name)	Modbus Signal Name
A	D0
B	D1
C	Common

Ground Jumper

The Digester Gas Monitor includes a 2-pin ground header (see Figure 3 on page 15) with a jumper that is used when the Digester Gas Monitor is in a Modbus system. If the Digester Gas Monitor is not wired into a Modbus system, the jumper should be installed. If it is wired into a Modbus system, it should be removed.

1.888.610.7664 www.calcert.com sales@calcert.com

Recommended Modbus Wiring

The recommended Modbus wiring for the Digester Gas Monitor is illustrated in Figure 20 below.

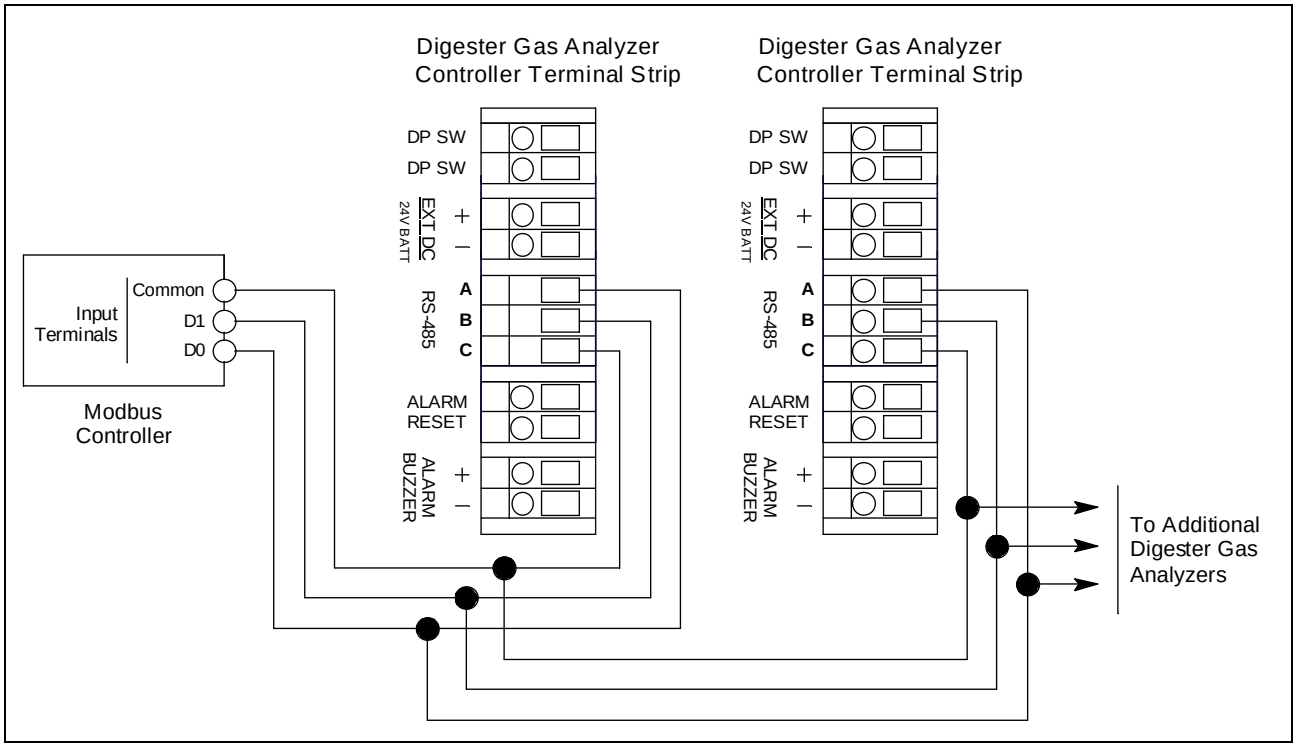

Figure 20: Recommended Modbus Wiring

Adding a Digester Gas Monitor to an Existing Digester Gas Monitor Installation with Older Digester Gas Monitors

A Digester Gas Monitor may be wired into an existing Digester Gas Monitor Modbus system where the Digester Gas Monitors do not have a ground header and jumper. The wiring connections are identical and the ground jumper on the Digester Gas Monitor must remain installed.

1.888.610.7664 www.calcert.com sales@calcert.com

Termination Jumper

The Digester Gas Monitor includes a 2-pin termination header (see Figure 3 on page 15) that may need to be installed when the Digester Gas Monitor is used in a Modbus system. Every Digester Gas Monitor is supplied with a termination jumper (a jumper block) installed onto this header. If the Digester Gas Monitor is not used in a Modbus system, this jumper has no function. When the Digester Gas Monitor is installed in a Modbus system, this jumper must be installed in a Digester Gas Monitor that is at the end of a Modbus line. Any Digester Gas Monitor in a Modbus system that is not at the end of a line must have the termination jumper removed (see Figure 21 & Figure 22 below).

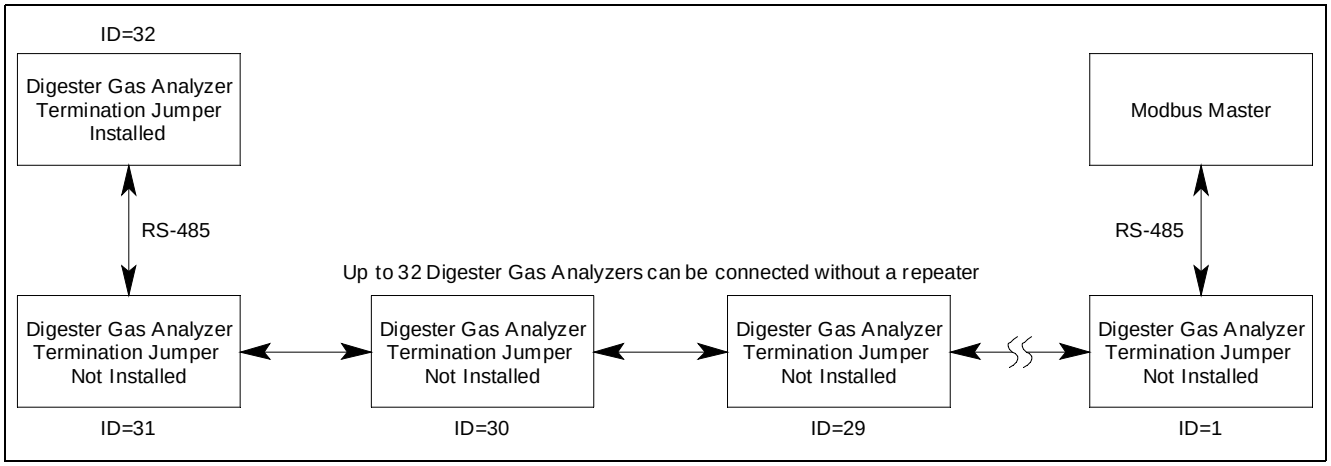

Figure 21: Multiple Digesters in a Daisy Chain Configuration

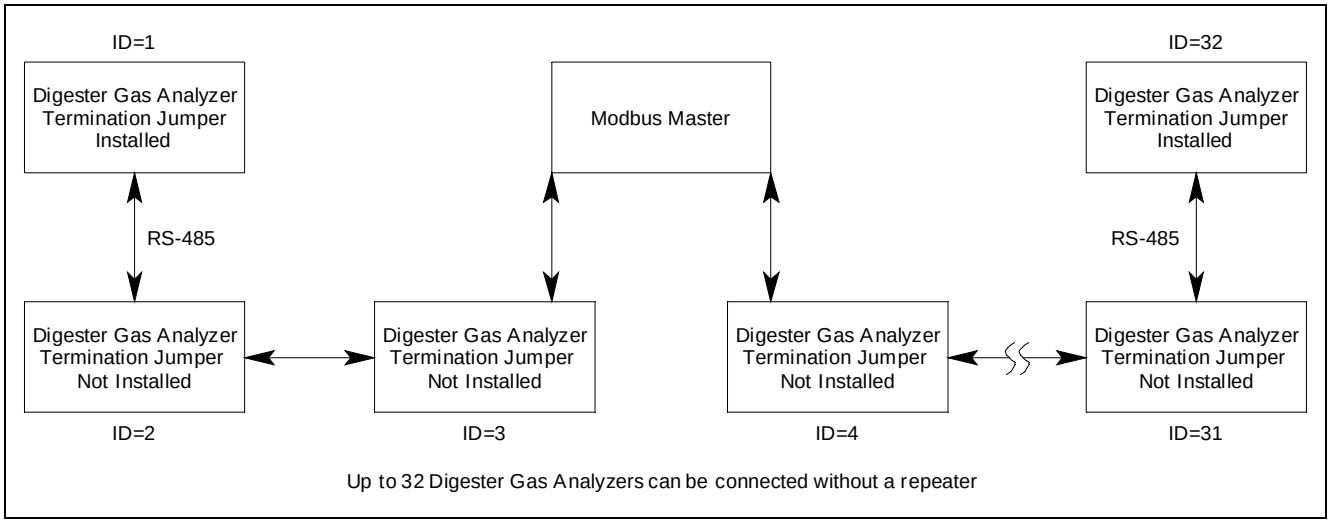

Figure 22: Multiple Digesters in a Two-Branch Configuration

1.888.610.7664 www.calcert.com sales@calcert.com

Using the Digester Gas Monitor in a 4-wire Modbus System

Although the Digester Gas Monitor is a 2-wire Modbus RTU device, it can be used with a 4-wire Modbus controller if the system wiring is modified as follows:

- Connect the controller's TxD0 and RxD0 wires together and use this connection as the 2-wire Modbus D0 signal.
- Connect the controller's TxD1 and RxD1 wires together and use this connection as the 2-wire Modbus D1 signal.
- Connect these D0 and D1 signals and the common wire from the controller to the 2-wire Modbus Network of Digester Gas Monitors.

Modbus Menu

The Modbus Menu allows you to configure various parameters relating to the Modbus setup of the Digester Gas Monitor. The Modbus Menu includes a 5-minute timeout feature. If you do not press a control switch for 5 minutes, the Digester Gas Monitor automatically returns to Standby Mode.

NOTE: If the Digester Gas Monitor returns to Standby Mode because of a timeout, it enters a warm-up period just as it does when it is first turned on.

1. While in Standby Mode, simultaneously press and hold the ENTER and DOWN/NO buttons for approximately 5 seconds to enter the Modbus Menu. Release the buttons when the **You Have Entered the MODBUS Menu** message appears on the display.
2. Press and release the UP/YES button to continue in the Modbus Menu to the Modbus Feature Enable/Disable screen.

```
MODBUS  Feature  is:

          DISABLED
UP / DN  then  ENT / ESC
```

3. In the parameter screens, use the ENTER button to accept a displayed parameter setting and proceed to the next parameter or the ESCAPE button to backup a screen.
4. If you want to change a displayed parameter setting, use the UP/YES or DOWN/NO button to change the parameter to the desired setting, then press and release the ENTER button to accept the change and proceed to the next screen.
5. Continue through the parameter setting screens changing any parameter settings as needed until the following message appears on the display.

```
Save  Settings?

[ Y / N ]
[ ESCAPE ]  to  back  up
```


1.888.610.7664 www.calcert.com sales@calcert.com

6. To save the channel parameter settings, press and release the UP /YES button. The screen will indicate that the Digester Gas Monitor is saving the settings for a few seconds then the Digester Gas Monitor will return to Standby Mode.

   If you do not want to save the channel parameter settings, press and release the DOWN/NO button. The display will indicate that no settings have been changed for a few seconds then the Digester Gas Monitor will return to Standby Mode.

Table 12 below lists the Modbus configuration parameters that can be configured in the Modbus Menu along with the factory set value for each parameter.

Table 12: Modbus Configuration Parameters

Modbus Mode Parameter	Available Settings & Description
Enabled/Disabled	Can be set to ENABLED or DISABLED (factory setting). Enables or disables the Modbus output.
Slave ID	The Slave ID can be set to values from 1 (factory setting) to 247. The Digester Gas Monitor will only receive messages from the Master which are addressed to this Slave ID (except for broadcast messages which are received by all slaves)
Baud Rate	Can be set to 1200, 2400, 4800, 9600 (factory setting), 14440, & 19200
Parity	EVEN (factory setting), ODD, NONE
Response Delay	The response delay can be set from 0 (factory setting) to 20 mS. This is an optional additional delay inserted by the Digester Gas Monitor prior to returning a response message to the Master. It may be helpful in some installations where the Master's preparedness to receive responses might be delayed.

NOTE: All Digester Gas Monitors on a Modbus network must be configured with the same baud rate and parity, and each Digester Gas Monitor must have a unique slave ID. For a Digester Gas Monitor to participate on a network, the ENABLED/DISABLED setting must be set to ENABLED.

Supported Modbus Functions

The Digester Gas Monitor supports Function Code 03, Read Holding Registers. There are a total of 41 registers available to be read via this Function Code but they are not sequential registers. Five separate register sets must be queried in order to read all of the available registers.

Register 40001, Instrument Information

The format for the first register, register 40001, is shown below in Table 13. Register 40001 gives information about the instrument as a whole, and should be checked before reading or interpreting the channel data in the registers that follow. When the Digester Gas Monitor is in any operating menu or mode other than normal operation, the channel registers simply hold their existing values. Once the

1.888.610.7664 www.calcert.com sales@calcert.com

Digester Gas Monitor returns to normal operation, the channel registers are updated each second.

Table 13: Register 40001

Current Operating Mode (MS-Byte)	Common Resource Status Bits "1" = Energized "0" = De-Energized (LS-Byte)
• 0 = Normal Operation • 1 = Factory (Reserved) • 2 = Input Setup Menu • 3 = Channel Configuration Menu • 4 = Global Menu • 5 = Modbus Menu • 6 = Calibration Mode • 7 = Min/Max Display • 8 = Low Power Standby	• Bit-7 (msb) = Common Fail Relay • Bit-6 = Relay-A • Bit-5 = Relay-B • Bit-4 = Relay-C • Bit-3 = Relay-D • Bit-2 = Strobe (optional) • Bit-1 = Audible Alarm (Buzzer) • Bit-0 (lsb) = Flow Fail

Registers 40002 and 40007 - 40015, Channel 1 Information

Register 40002

Table 14 below shows the information in register 40002.

Table 14: Register 40002

Channel Operational State (MS-Byte)	Channel Status Bits (LS-Byte)
• 0 = (this code is not used) • 1 = Standby • 2 = Normal Operation • 3 = Warm Up • 4 = Fail • 5 = Post-Calibration • 6 = Low Power	• Bit-7 (msb) = Relay-1 (1 = energized) • Bit-6 = Relay-2 (1 = energized) • Bit-5 = (this bit is not used) • Bit-4 = Alarm-1 (1 = asserted) • Bit-3 = Alarm-2 (1 = asserted) • Bit-2 = Alarm-3 (1 = asserted) • Bits[1:0] = Channel Usage Code [00] = Not Used [01] = Standby [10] = Active [11] = unused code

Registers 40007 - 40010

The 8 bytes (characters) in these registers contain the channel gas name in ASCII characters.

Registers 40011 - 40013

The 6 bytes (characters) in these registers contain the channel gas reading in ASCII characters.

Registers 40014 - 40015

The 4 bytes (characters) in registers 40014 and 40015 contain the channel gas units in ASCII characters.

1.888.610.7664 www.calcert.com sales@calcert.com

Registers 40016 and 40021 - 40029, Channel 2 Information

Register 40016

Table 15 below shows the information in register 40016.

Table 15: Register 40016

Channel Operational State (MS-Byte)	Channel Status Bits (LS-Byte)
• 0 = (this code is not used) • 1 = Standby • 2 = Normal Operation • 3 = Warm Up • 4 = Fail • 5 = Post-Calibration • 6 = Low Power	• Bit-7 (msb) = Relay-1 (1 = energized) • Bit-6 = Relay-2 (1 = energized) • Bit-5 = (this bit is not used) • Bit-4 = Alarm-1 (1 = asserted) • Bit-3 = Alarm-2 (1 = asserted) • Bit-2 = Alarm-3 (1 = asserted) • Bits[1:0] = Channel Usage Code [00] = Not Used [01] = Standby [10] = Active [11] = unused code

Registers 40021 - 40024

The 8 bytes (characters) in these registers contain the channel gas name in ASCII characters.

Registers 40025 - 40027

The 6 bytes (characters) in these registers contain the channel gas reading in ASCII characters.

Registers 40028 - 40029

The 4 bytes (characters) in registers 40028 and 40029 represent the channel gas units in ASCII characters.

1.888.610.7664 www.calcert.com sales@calcert.com

Registers 40030 and 40035 - 40043, Channel 3 Information

Register 40030

Table 16 below shows the information in register 40030.

Table 16: Register 40030

Channel Operational State (MS-Byte)	Channel Status Bits (LS-Byte)
• 0 = (this code is not used) • 1 = Standby • 2 = Normal Operation • 3 = Warm Up • 4 = Fail • 5 = Post-Calibration • 6 = Low Power	• Bit-7 (msb) = Relay-1 (1 = energized) • Bit-6 = Relay-2 (1 = energized) • Bit-5 = (this bit is not used) • Bit-4 = Alarm-1 (1 = asserted) • Bit-3 = Alarm-2 (1 = asserted) • Bit-2 = Alarm-3 (1 = asserted) • Bits[1:0] = Channel Usage Code [00] = Not Used [01] = Standby [10] = Active [11] = unused code

Registers 40035 - 40038

The 8 bytes (characters) in these registers contain the channel gas name in ASCII characters.

Registers 40039 - 40041

The 6 bytes (characters) in these registers contain the channel gas reading in ASCII characters.

Registers 40042 - 40043

The 4 bytes (characters) in registers 40042 and 40043 contain the channel gas units in ASCII characters.

1.888.610.7664 www.calcert.com sales@calcert.com

Registers 40044 and 40049 - 40057, Channel 4 Information

Register 40044

Table 17 below shows the information in register 40044.

Table 17: Register 40044

Channel Operational State (MS-Byte)	Channel Status Bits (LS-Byte)
• 0 = (this code is not used) • 1 = Standby • 2 = Normal Operation • 3 = Warm Up • 4 = Fail • 5 = Post-Calibration • 6 = Low Power	• Bit-7 (msb) = Relay-1 (1 = energized) • Bit-6 = Relay-2 (1 = energized) • Bit-5 = (this bit is not used) • Bit-4 = Alarm-1 (1 = asserted) • Bit-3 = Alarm-2 (1 = asserted) • Bit-2 = Alarm-3 (1 = asserted) • Bits[1:0] = Channel Usage Code [00] = Not Used [01] = Standby [10] = Active [11] = unused code

Registers 40049 - 40052

The 8 bytes (characters) in these registers contain the channel gas name in ASCII characters.

Registers 40053 - 40055

The 6 bytes (characters) in these registers contain the channel gas reading in ASCII characters.

Registers 40056 - 40057

The 4 bytes (characters) in registers 40056 and 40057 contain the channel gas units in ASCII characters.

1.888.610.7664 www.calcert.com sales@calcert.com

Chapter 10: Maintenance

Overview

This chapter describes preventive maintenance procedures for the Digester Gas Monitor and replacement procedures for the sensors, the particle filter, the hydrophobic filter, the oil mist filter, the water traps' filter element, the internal water trap, the external water trap, and the fuses. It includes a troubleshooting guide for problems you may encounter with the Digester Gas Monitor.

Procedures for replacing the following items are located in the Digester Gas Monitor Maintenance Manual which can be found

- Dryer
- All flowmeters
- Aspirator
- Solenoid Valve B

Preventive Maintenance

Preventive maintenance of the Digester Gas Monitor consists of monthly procedures to ensure that the flow system is operating correctly and quarterly calibrations.

Monthly

1. Visually inspect the particle filter, the hydrophobic filter, the oil mist filter, the water trap filter element, and the dryer for signs of dirt or particulates.
2. Visually inspect all flowmeters and ensure that they are reading the appropriate flow as outlined in Table 5 on page 42.
3. Visually inspect the sample inlet to be sure that nothing is blocking it or adhering to it.

Quarterly

1. Perform a calibration as described in "Performing a Calibration" on page 71.

1.888.610.7664 www.calcert.com sales@calcert.com

Troubleshooting

Table 18 describes symptoms, probable causes, and recommended actions for the most common problems you may encounter with the Digester Gas Monitor.

Table 18: Troubleshooting the Digester Gas Monitor

Condition	Symptom(s)	Probable Causes	Recommended Action
No Power to Instrument and/ or Display PCB	• The PILOT light is off. • The display screen is blank.	• The power wiring is disconnected or misconnected. • The AC fuse is blown. • The display cable is disconnected or misconnected.	1. Verify that the wiring to the power source is correct and secure. 2. At the Digester Gas Monitor, verify that the wiring to the AC in terminal strip is correct and secure. 3. Check the continuity of the AC fuses. 4. Verify that the display cable is connected. The display (ribbon) cable plugs into a rectangular connector on the top edge of the control PCB and on the top edge of the main PCB (labeled **Front Panel**). 5. If the power difficulties continue, contact RKI for further instruction.
Frequent or Suspect Alarms	• The Digester Gas Monitor alerts you to frequent or suspect alarms. • The detectors' fresh air readings remain on zero (20.9 for oxygen) despite alarm occurrences.	• The Digester Gas Monitor is experiencing false readings due to RFI or EMI. • The detector wiring has one or more intermittent connections.	1. Verify that the detector wiring is correct and secure. 2. Increase the alarm on delay setting in the Configuration Menu. 3. Increase the noise filter in the Configuration Menu. 4. If the frequent or suspect alarm difficulties continue, contact RKI for further instruction.
Momentarily Unstable Gas Readings on Display	• The display reading for one or more channels rises or falls briefly and then returns to the normal fresh air reading.	• The Digester Gas Monitor is experiencing false readings due to RFI or EMI. • The detector wiring has one or more intermittent connections. • The noise filter setting is too low. • The dead band setting is too low. • The display screen is malfunctioning.	1. Verify that the detector wiring is properly shielded. 2. Verify that the detector wiring is correct and secure. 3. Increase the noise filter setting in the Configuration Menu. 4. Increase the dead band setting in the Configuration Menu. 5. If the difficulties continue, contact RKI for further instruction.

1.888.610.7664 www.calcert.com sales@calcert.com

Table 18: Troubleshooting the Digester Gas Monitor (Continued)

Condition	Symptom(s)	Probable Causes	Recommended Action
Buzzer or Optional Horn/ Strobe Not Working	• The buzzer or horn/strobe does not sound an audible alarm during alarm conditions. • The buzzer or horn/strobe sounds weak or broken.	• The STROBE Installation item in the Global Menu is set to NO STROBE INSTALLED. • The buzzer or horn/ strobe is disconnected or misconnected. • The buzzer or horn/ strobe is malfunctioning.	1. Verify that the STROBE Installation item in the Global Menu is set to STROBE IS INSTALLED. 2. Verify that the wiring to the **ALARM BUZZER -** and **ALARM BUZZER +** terminals of the controller terminal strip is correct and secure. 3. Verify that the wiring to the **STROBE -** and **STROBE +** terminals in the upper right corner of the main PCB is correct. 4. If the buzzer or horn/strobe difficulties continue, contact RKI for further instruction.
Reset Switch not Working	• Depending on the instrument setup, the buzzer or strobe does not turn off in the appropriate situation when the reset switch is pressed. • The applicable alarm circuit does not reset when you press the reset switch after an alarm condition passes.	• The reset switch is disconnected or misconnected. • The reset switch is malfunctioning. • The Digester Gas Monitor is not properly setup for the desired reset switch operation.	1. Verify that the wiring to the **ALARM RESET** (2) terminals of the controller terminal strip is correct and secure. 2. If the reset switch difficulties continue, contact RKI for further instruction. 3. Make sure that the Digester Gas Monitor is properly setup in the Global Menu and Configuration Menus for the desired reset switch operation.
High Flow	• The Flow to Sensors flowmeter cannot be set to 3.0 SCFH. • The H_2S Dilution flowmeters cannot be set to their appropriate flows.	• The sample regulator is set too high.	1. Loosen the nut on the sample regulator and turn the sample regulator knob counterclockwise 2 turns. Tighten the nut to hold the adjustment in place.

1.888.610.7664 www.calcert.com sales@calcert.com

Table 18: Troubleshooting the Digester Gas Monitor (Continued)

Condition	Symptom(s)	Probable Causes	Recommended Action
Flow Fail or Low Flow	• The Digester Gas Monitor indicates a flow failure alarm. • The Flow to Sensors flowmeter cannot be set to 3.0 SCFH. • The H_2S Dilution flowmeters cannot be set to their appropriate flows.	• The compressed air pressure is not high enough. • The flow regulator is set too low. • There is a flowmeter malfunction. • The inlet line is clogged. • The water trap is full of water or the water trap filter is dirty. • The hydrophobic filter is dirty or clogged. • The oil mist filter is dirty or clogged. • The particle filter is dirty or clogged. • There are particulates in the flow system.	1. Check your compressed air source to make sure the settings are appropriate and the pressure is high enough. 2. Try to adjust the Flow to Sensors flowmeter to 3.0 SCFH by turning the flow regulator adjustment knob clockwise. 3. Inspect the flowmeters to see if there is anything wrong with them. 4. Inspect the inlet line to make sure nothing is blocking it. 5. Inspect the water trap and empty the water trap if it is full of water. If the water trap filter is dirty or clogged, replace it as described in "Replacing the Internal and External Water Traps' Filter Element" on page 98. 6. Inspect the hydrophobic filter and replace it if it appears dirty or clogged. See "Replacing the Hydrophobic Filter" on page 93 for replacement instructions. 7. Inspect the oil mist filter and replace it if it appears dirty or clogged. See "Replacing the Oil Mist Filter" on page 96 for replacement instructions. 8. Inspect the particle filter and replace it if it appears dirty or clogged. See "Replacing the Particle Filter" on page 92 for replacement instructions. 9. Visually inspect the flow system for blockages. 10. If the problems persist, contact RKI Instruments, Inc. for further instruction.
Water Condensation in Flow System	• A visual inspection reveals condensation in the flow system.	• The oil mist filter is clogged. • The flow through the dryer is insufficient.	1. Inspect the oil mist filter and replace it if it appears dirty or clogged. See "Replacing the Oil Mist Filter" on page 96 for replacement instructions. 2. Measure the air flow coming out of the dryer exhaust fitting. It should be at least 6 SCFH. For ideal operation, it should be closer to 9 SCFH.

1.888.610.7664 www.calcert.com sales@calcert.com

Sensor Replacement

This section describes how to replace the sensors in the Digester Gas Monitor. The figure below shows the flow block that is installed in the Digester Gas Monitor and the location of each sensor in the flow block.

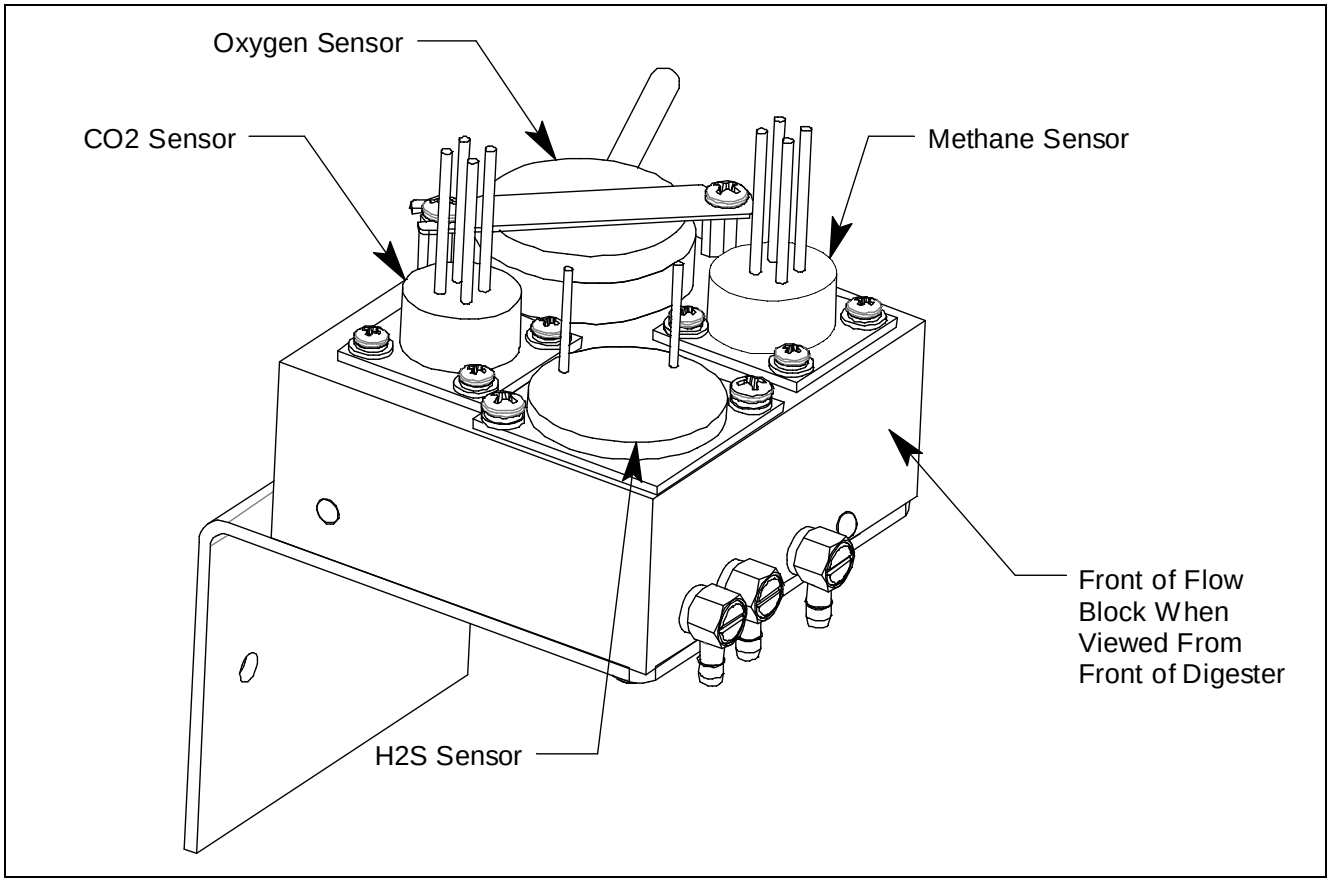

Figure 23: Flow Block

Replacing the Methane Sensor

1. Turn off the Digester Gas Monitor
2. Turn off incoming power to the Digester Gas Monitor.
3. Open the housing door of the Digester Gas Monitor.
4. Turn the flow regulator knob all the way counterclockwise to close the flow regulator's output.
5. The methane sensor and preamp are located in the lower right corner of the flow block when viewed from the top. Unscrew the 4 screws that retain the preamp circuit board. Take care not to lose the flat washer and lock washer under each screw head.
6. Lift the preamp circuit board away from the flow block.

   Be careful not to pull on the cable that connects the preamp circuit to the main circuit board.

   There is a gasket in the bottom of the sensor cavity. Make sure the gasket stays in place.
7. Pull the methane sensor off the preamp circuit board.

1.888.610.7664 www.calcert.com sales@calcert.com

8. Plug the new sensor into the preamp board.
9. Reinstall the preamp circuit board with the sensor onto the flow block using the screws, lock washers, and flat washers removed in step 5. Be sure to tighten the screws firmly and evenly.
10. Turn the flow regulator knob clockwise to set the sensor flow to 3 SCFH when you restart the system.
11. Turn on incoming power.
12. Calibrate the replacement sensor as described in “Performing a Calibration” on page 71.

Replacing the Oxygen Sensor

1. Turn off the Digester Gas Monitor.
2. Turn off incoming power to the Digester Gas Monitor.
3. Open the housing door of the Digester Gas Monitor.
4. Turn the flow regulator knob all the way counterclockwise to close the flow regulator’s output.
5. The oxygen sensor is located in the upper right corner of the flow block when viewed from the top. Unscrew the two screws that hold the oxygen sensor bracket a few turns so that you can rotate and remove the oxygen sensor bracket.

   There is an O-ring located in the bottom of the sensor cavity. Make sure the O-ring stays in place.
6. Unplug the connector from the socket that leads from the sensor.
7. Plug the socket of the replacement sensor into the connector.
8. Place the sensor in the oxygen sensor cavity of the flow block, then position the retaining plate on the two standoffs.
9. Reinstall the oxygen sensor bracket and tighten both bracket screws firmly and evenly.
10. Turn the flow regulator knob clockwise to set the sensor flow to 3 SCFH when you restart the system.
11. Turn on incoming power.
12. Calibrate the replacement sensor as described in “Performing a Calibration” on page 71.

Replacing the H_2S Sensor

1. Turn off the Digester Gas Monitor.
2. Turn off incoming power to the Digester Gas Monitor.
3. Open the housing door of the Digester Gas Monitor.
4. Turn the flow regulator knob all the way counterclockwise to close the flow regulator’s output.
5. The H_2S sensor and preamp are located in the bottom left corner of the flow block when viewed from the top. Unscrew the 2 screws that retain the preamp circuit board. Take care not to lose the flat washer and lock washer under each screw head.
6. Lift the preamp circuit board away from the flow block.

   Be careful not to pull on the cable that connects the preamp circuit to the main circuit board.

   There is a gasket in the bottom of the sensor cavity. Make sure the gasket stays in place.
7. Pull the H_2S sensor off the preamp circuit board.

1.888.610.7664 www.calcert.com sales@calcert.com

8. Remove the replacement sensor from its packaging and remove the wire jumper. This wire jumper is installed on the sensor pins for shipment or storage but must be removed for the sensor to operate properly when installed in a detector.

WARNING: The sensor will not operate properly if the wire jumper is not removed.

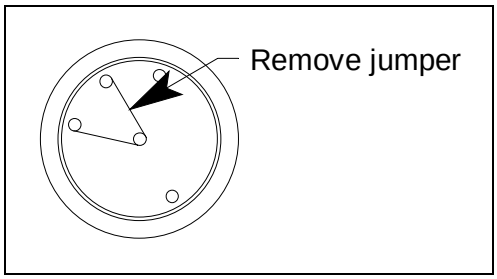

Figure 24: Plug-In Sensor Jumper Removal

9. Plug the new sensor into the preamp board.
10. Reinstall the preamp circuit board with the sensor onto the flow block using the screws, lock washers, and flat washers that were removed in step 5. Be sure to tighten the screws firmly and evenly.
11. Turn the flow regulator knob clockwise to set the sensor flow to 3 SCFH when you restart the system.
12. Turn on incoming power.
13. Calibrate the replacement sensor as described in “Performing a Calibration” on page 71.

Replacing the CO_2 Sensor

1. Turn off the Digester Gas Monitor.
2. Turn off incoming power to the Digester Gas Monitor.
3. Open the housing door of the Digester Gas Monitor.
4. Turn the flow regulator knob all the way counterclockwise to close the flow regulator’s output.
5. The CO_2 sensor and preamp are located in the upper left corner of the flow block when viewed from the top. Unscrew the 4 screws that retain the preamp circuit board. Take care not to lose the flat washer and lock washer under each screw head.
6. Lift the preamp circuit board away from the flow block.

   Be careful not to pull on the cable that connects the preamp circuit to the main circuit board.

   There is a gasket in the bottom of the sensor cavity. Make sure the gasket stays in place.
7. Pull the CO_2 sensor off the preamp circuit board.
8. Plug the new sensor into the preamp board.
9. Reinstall the preamp circuit board with the sensor onto the flow block using the screws, lock washers, and flat washers that were removed in step 5. Be sure to tighten the screws firmly and evenly.
10. Turn the flow regulator knob clockwise to set the sensor flow to 3 SCFH when you restart the system.

1.888.610.7664 www.calcert.com sales@calcert.com

11. Turn on incoming power.
12. Calibrate the replacement sensor as described in “Performing a Calibration” on page 71.

Replacing the Particle Filter

This section describes how to replace the particle filter.

1. Turn off the Digester Gas Monitor.
2. Turn off or unplug power to the Digester Gas Monitor.
3. Open the housing door of the Digester Gas Monitor.
4. Turn the flow regulator knob all the way counterclockwise to close the flow regulator’s output.
5. Locate the particle filter. It is in the bottom right corner of the housing.

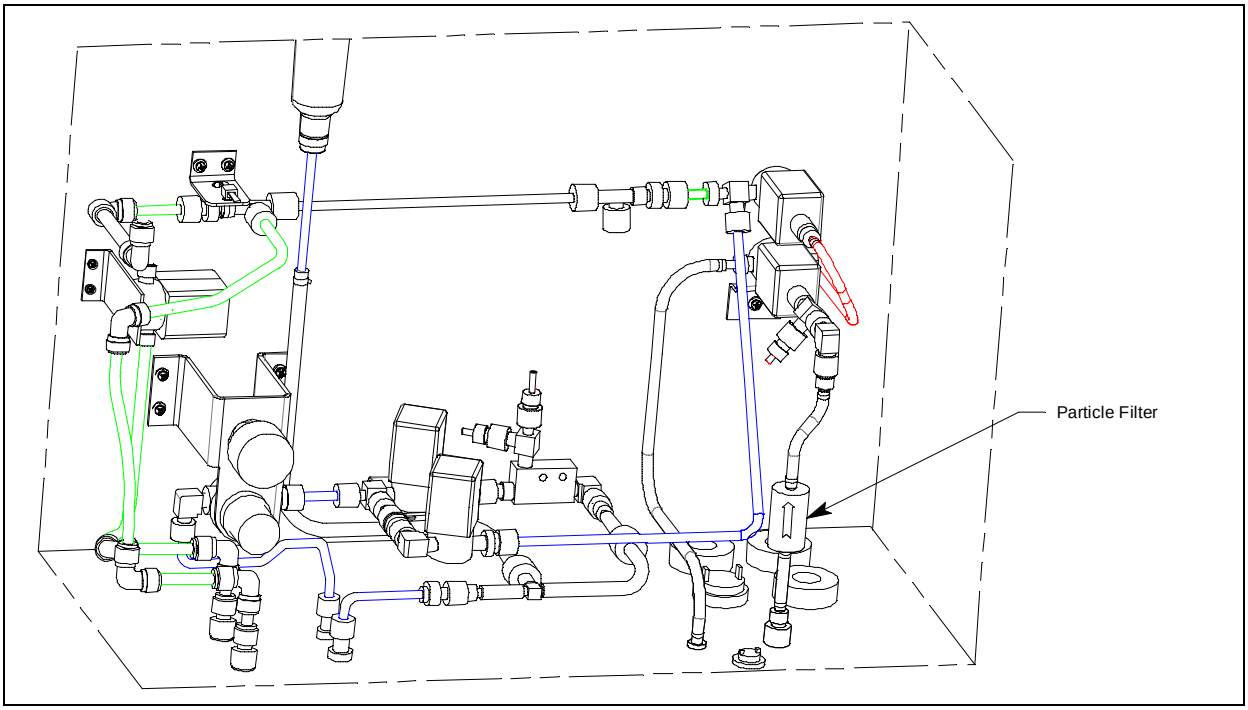

Figure 25: Particle Filter Location

1.888.610.7664 www.calcert.com sales@calcert.com

6. Use pliers to remove the clamps from each end of the particle filter. Then remove the tubing. If the tubing gets damaged, replace it with 3/16 inch ID x 5/16 inch OD tubing.

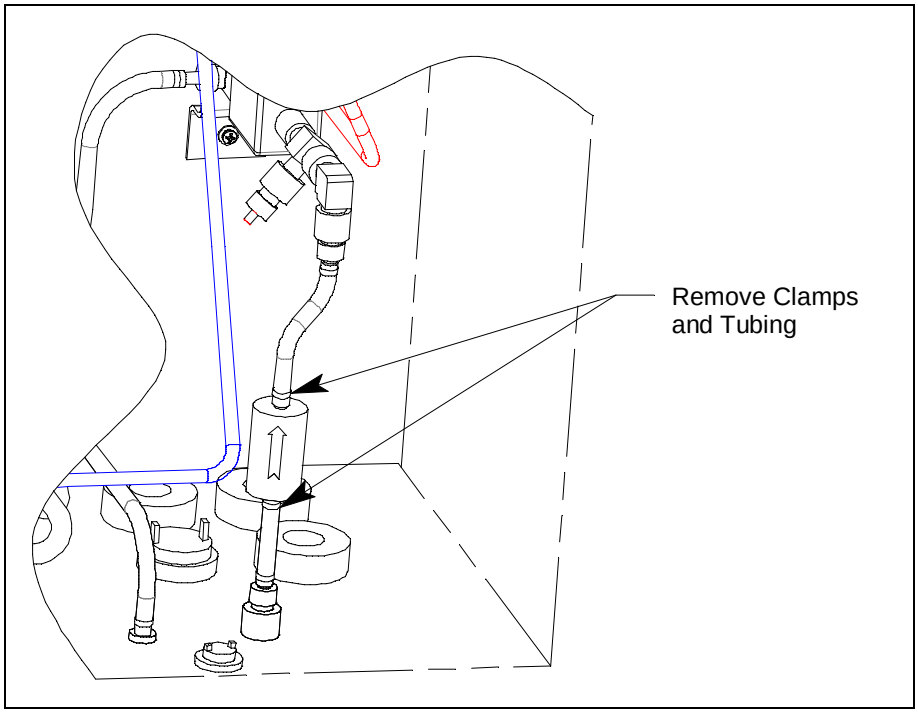

Figure 26: Particle Filter Clamp and Tubing Removal

7. Remove the old particle filter.
8. Place the new particle filter in the same orientation as the one that was removed and connect the tubing to each end of it. The arrow on the particle filter should be pointing up, away from the Fresh Air Inlet fitting.
9. Use pliers to reinstall the clamps over the tubing connections.
10. Plug in or turn on all incoming power to the Digester Gas Monitor.
11. Place the Digester Gas Monitor's power switch in the ON position, then verify that the PILOT light is on.
12. Turn the flow regulator knob clockwise to set the sensor flow to 3 SCFH once the system has started up.
13. Close and secure the housing door.

Replacing the Hydrophobic Filter

This section describes how to replace the hydrophobic filter.

1. Turn off the Digester Gas Monitor.
2. Turn off or unplug power to the Digester Gas Monitor.
3. Open the housing door of the Digester Gas Monitor.
4. Turn the flow regulator knob all the way counterclockwise to close the flow regulator's output.

1.888.610.7664 www.calcert.com sales@calcert.com

5. Locate the hydrophobic filter. It is just to the left of the main circuit board.

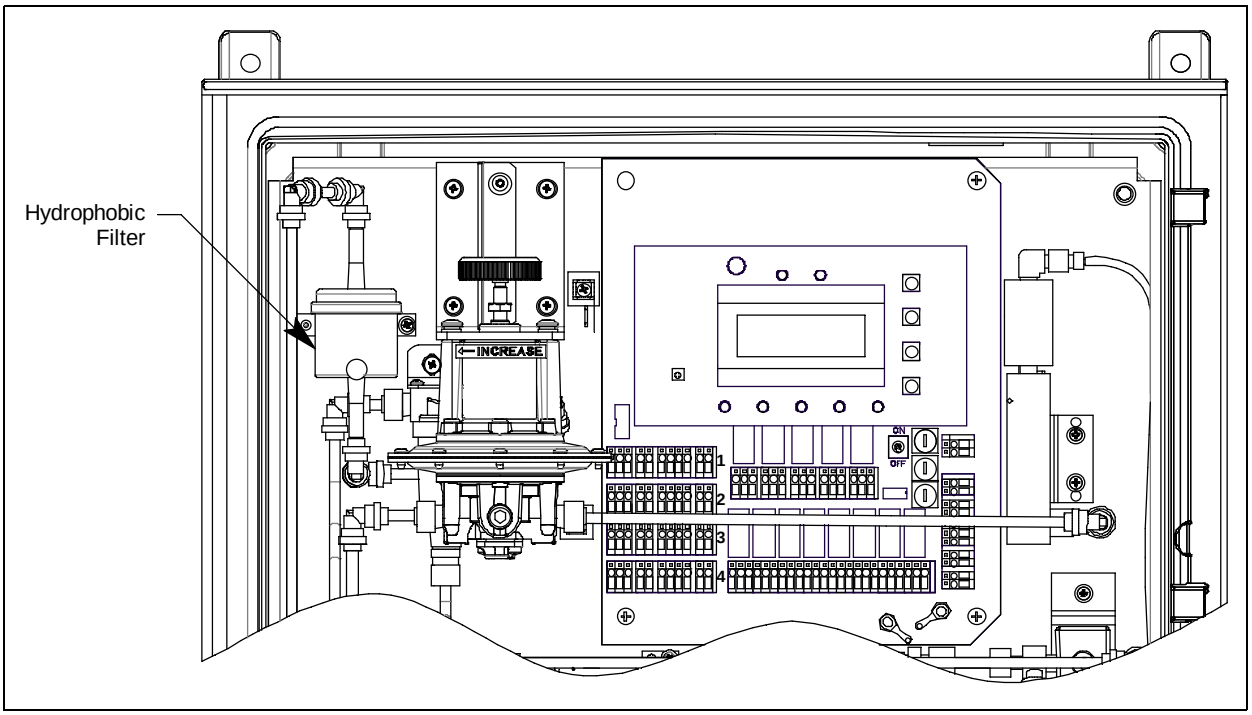

Figure 27: Hydrophobic Filter Location

6. Grasp the hydrophobic filter and pull it out of its metal clamp.

1.888.610.7664 www.calcert.com sales@calcert.com

7. Grasp the push fitting at the bottom of the hydrophobic filter and push the collet on the fitting away from the filter. Pull the fitting away from the filter. Repeat the process with the fitting at the top of the hydrophobic filter.

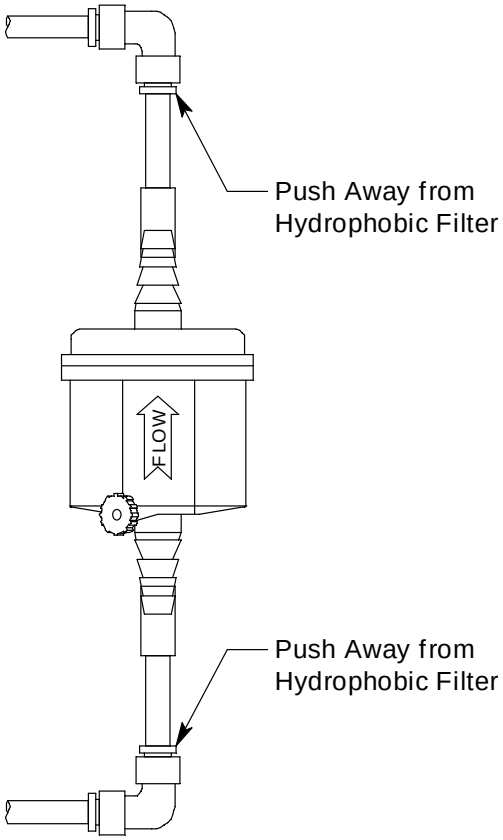

8. Remove the old hydrophobic filter.
9. The replacement hydrophobic filter has rigid tubing at each end. Push the ends of the replacement hydrophobic filter into the push fittings on the flow system. The arrow on the hydrophobic filter should be pointing up.
10. Place the new hydrophobic filter back into the metal clamp.
11. Plug in or turn on all incoming power to the Digester Gas Monitor.
12. Place the Digester Gas Monitor's power switch in the ON position, then verify that the PILOT light is on.
13. Turn the flow regulator knob clockwise to set the sensor flow to 3 SCFH once the system has started up.
14. Close and secure the housing door.

1.888.610.7664 www.calcert.com sales@calcert.com

Replacing the Oil Mist Filter

1. Turn off the Digester Gas Monitor.
2. Turn off or unplug power to the Digester Gas Monitor.
3. Open the housing door of the Digester Gas Monitor.
4. Turn the flow regulator knob all the way counterclockwise to close the flow regulator's output.
5. Locate the oil mist filter. It is located along the middle bottom of the flow assembly.

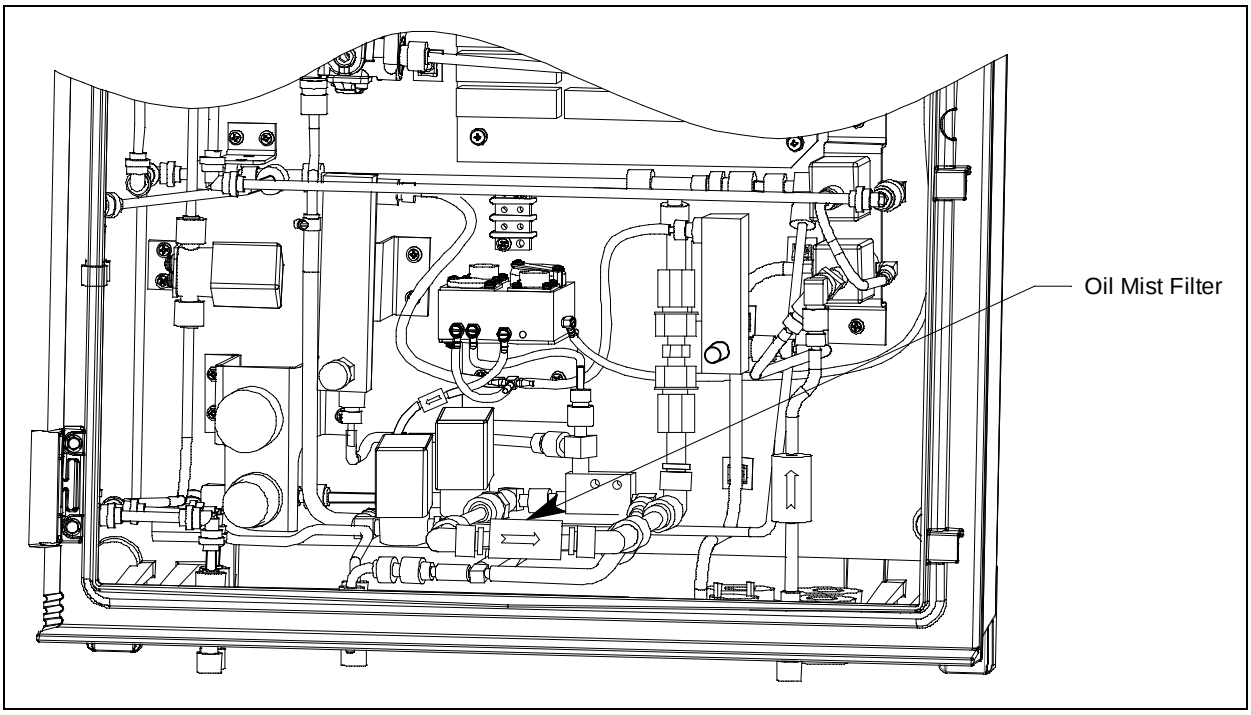

Figure 28: Oil Mist Filter Location

6. The oil mist filter must be removed from the flow system with the push fittings attached because pliers are needed to remove the push fittings from the oil mist filter.
7. Grasp one of the white, right angle push fittings on the side that faces back toward the mounting plate. Press the collet toward the fitting and pull the fitting away from the mounting plate. Repeat with the other right angle push fitting. The oil mist filter with fittings still connected can now be removed.

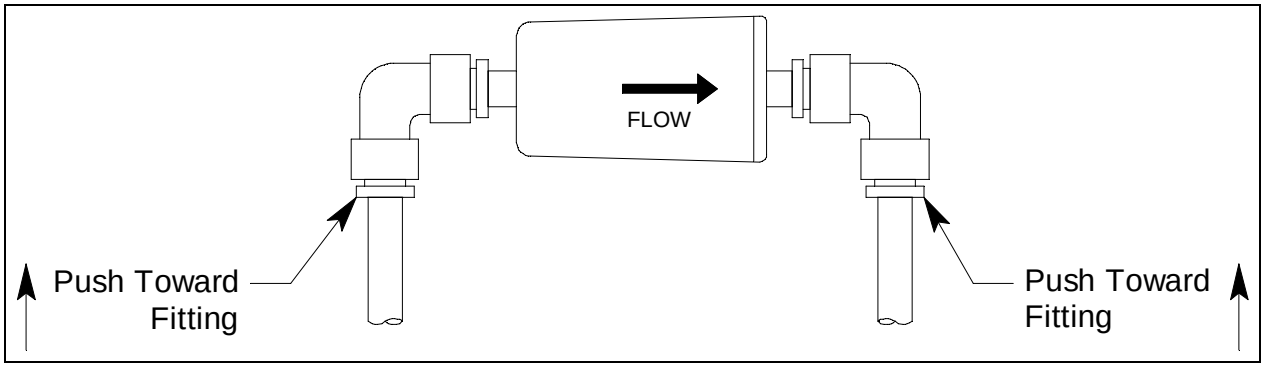

Figure 29: Removing the Oil Mist Filter from the Flow System

1.888.610.7664 www.calcert.com sales@calcert.com

8. Use needle nose pliers to press down on the collet of each connected push fitting and remove the fittings from the oil mist filter. Discard the old oil mist filter but be sure to keep the push fittings that were removed.

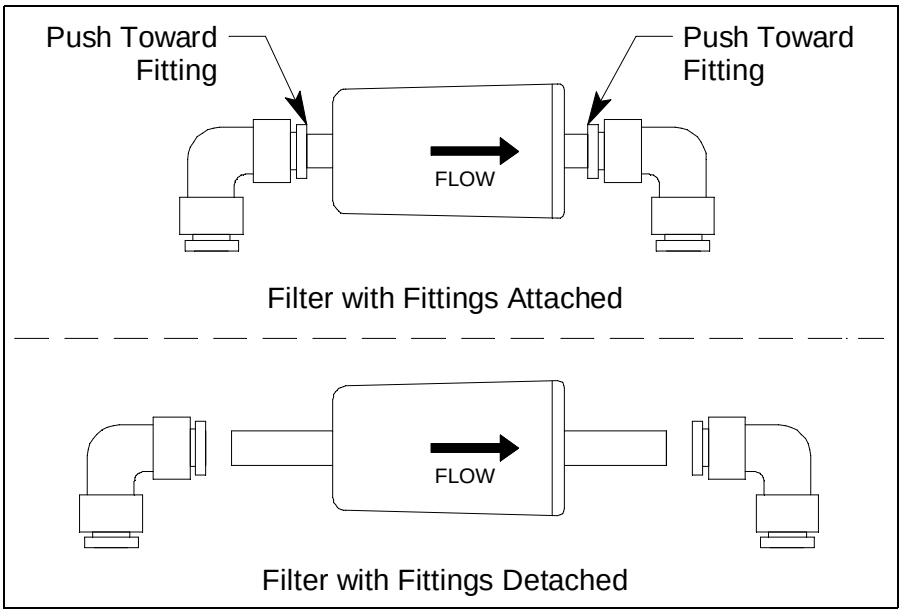

Figure 30: Removing the Fittings from the Oil Mist Filter

9. Press one of the white, right angle push fittings onto the new oil mist filter's barb. Repeat with the other fitting.
10. Install the new oil mist filter and fitting assembly into the flow system by connecting the push fittings to the open rigid tubing. The arrow on the filter should be pointing to the right.
11. Plug in or turn on all incoming power to the Digester Gas Monitor.
12. Place the Digester Gas Monitor's power switch in the ON position, then verify that the PILOT light is on.
13. Turn the flow regulator knob clockwise to set the sensor flow to 3 SCFH once the system has started up.
14. Close and secure the housing door.

1.888.610.7664 www.calcert.com sales@calcert.com

Replacing the Internal and External Water Traps' Filter Element

This section describes how to replace the water trap filter element in the internal water trap and the external water trap.

1. Turn off the Digester Gas Monitor.
2. Turn off or unplug power to the Digester Gas Monitor.
3. Open the housing door of the Digester Gas Monitor.
4. Turn the flow regulator knob all the way counterclockwise to close the flow regulator's output.
5. If replacing the external water trap's filter element, turn off the compressed air source before continuing.
6. Locate the water trap.
   - **Internal**: The water trap is located to the left of the main PCB.
   - **External**: The water trap is user installed and should be located somewhere close to the Digester Gas Monitor.
7. Disconnect tubing from the bottom of the water trap.
   - **Internal**: The fitting at the bottom of the water trap has a nut and a hex. The hex is positioned above the nut. Use a 9/16 inch open-end wrench or an adjustable wrench to hold the hex in place. Use a second 9/16 inch open-end wrench or adjustable wrench to unscrew the nut. The line leading to the bottom of the water trap includes flexible tubing. Once the nut is loose, move the nut and tubing out of the way. The nut will slide down the tubing leaving the ferrules at the end of the tubing exposed. The ferrules should not come off.
   - **External**: Disconnect any installed flexible tubing from the hose barb on the bottom of the water trap.
8. Grasp the glass bowl of the water trap and unscrew it from the water trap lid. Be sure the O-ring that seals the glass bowl does not come out of the lid.
9. Unscrew the filter element holder from the water trap lid.
10. There is a circular, black deflector with a gasket on top of it that may come out when you remove the filter element holder. It has ridges along the outside edge. Do not lose the deflector or the gasket.
11. Remove the cylindrical water trap element.
12. Install a new filter element onto the filter element holder being sure that the grooved side of the element is facing down and gets inserted into the holder. The exposed end of the filter element should be smooth.
13. If the deflector and/or gasket came out when you removed the filter element holder, install the deflector on top of the filter element being sure that the deflector is curving down toward the filter element. Install the gasket over the deflector.
14. Screw the filter element holder back into the water trap lid.
15. Screw the glass bowl back into the water trap lid.

1.888.610.7664 www.calcert.com sales@calcert.com

16. Reattach tubing to the bottom of the water trap.
    - **Internal**: Insert the tubing with the ferrules into the fitting at the bottom of the water trap and use a 9/16 inch open-end wrench or adjustable wrench to tighten the nut while using a second 9/16 inch open-end wrench or adjustable wrench to hold the hex still.
    - **External**: Reattach the flexible tubing to the hose barb on the bottom of the water trap, if necessary.
17. Turn on the compressed air source, if necessary.
18. Plug in or turn on all incoming power to the Digester Gas Monitor.
19. Place the Digester Gas Monitor's power switch in the ON position, then verify that the PILOT light is on.
20. Turn the flow regulator knob clockwise to set the sensor flow to 3 SCFH once the system has started up.
21. Close and secure the housing door.

Replacing the Internal Water Trap

These instructions describe how to replace the internal water trap. The water trap's bracket and connected fittings will be reused. Use part number 33-0413-12 when replacing the internal water trap.

1. Turn off or unplug incoming power to the Digester Gas Monitor.
2. Open the Digester Gas Monitor housing door, then place the power switch in the OFF position.
3. Turn the flow regulator knob all the way counterclockwise to close the flow regulator's output.
4. Locate the internal water trap and the sample regulator. They are to the left of the main circuit board.

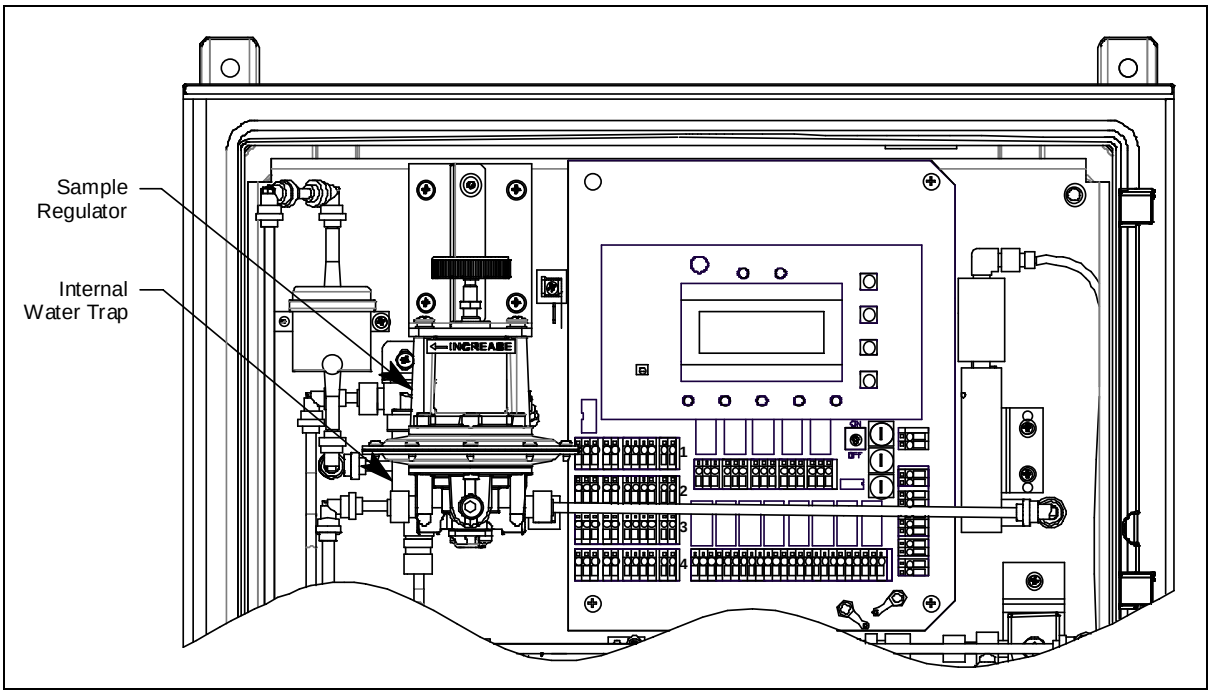

Figure 31: Internal Water Trap Location

1.888.610.7664 www.calcert.com sales@calcert.com

5. The sample regulator must be removed before the internal water trap can be replaced.
6. Each side of the sample regulator has a push fitting. Press the collet of one of the push fittings toward the sample regulator and gently pull out the installed tubing. Do the same thing with the other push fitting.

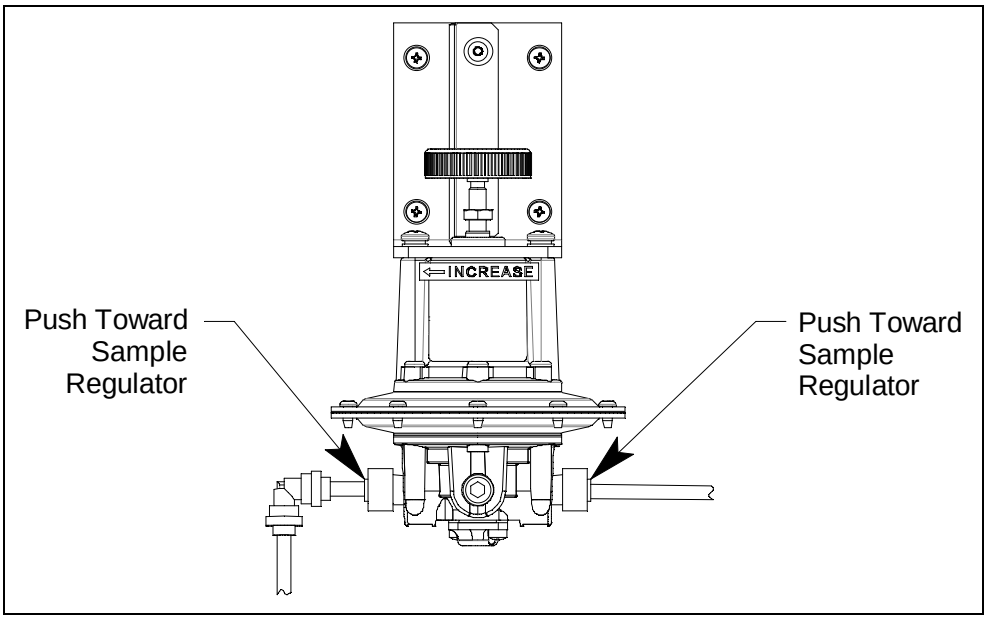

Figure 32: Sample Regulator Push Fitting Removal

7. Unscrew the 4 screws that retain the installation bracket to the mounting plate. There is a flat washer and a lock washer beneath each screw. Keep the screws, flat washers, and lock washers in a safe spot.

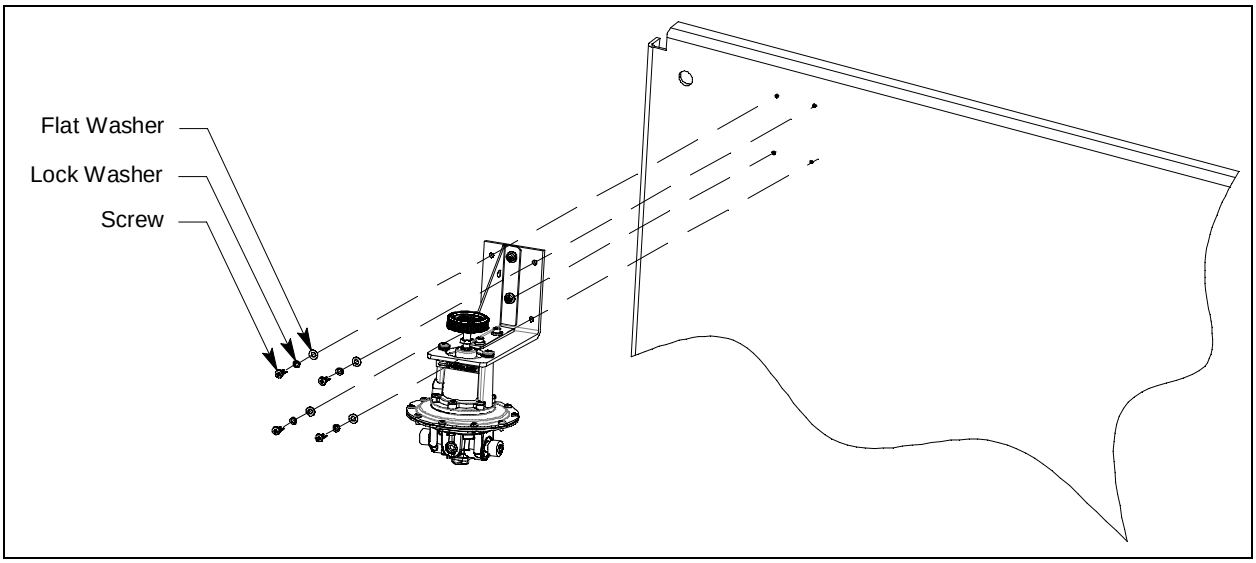

Figure 33: Removing Sample Regulator Bracket from Plate

8. The internal water trap is now accessible.

1.888.610.7664 www.calcert.com sales@calcert.com

9. The fitting at the bottom of the water trap has a nut and a hex. The hex is positioned above the nut. Use a 9/16 inch open-end wrench or an adjustable wrench to hold the hex in place. Use a second 9/16 inch open-end wrench or adjustable wrench to unscrew the nut.

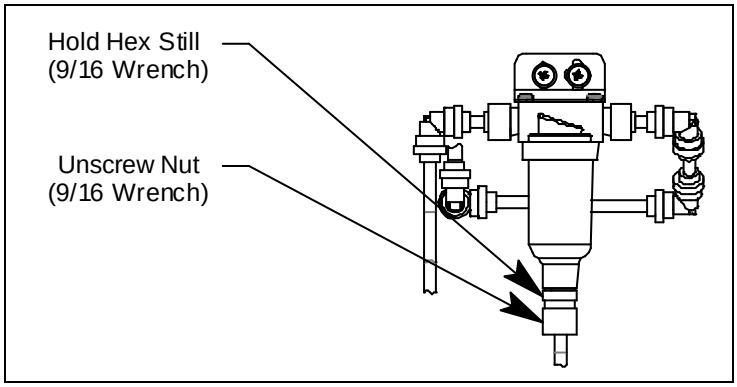

Figure 34: Unscrewing the Nut on the Internal Water Trap

10. The line leading to the bottom of the water trap includes flexible tubing. Once the nut is loose, move the nut and tubing out of the way. The nut will slide down the tubing leaving the ferrules at the end of the tubing exposed. The ferrules should not come off.
11. Use a 9/16 wrench to remove the rest of the fitting from the bottom of the water trap. There is a gasket installed between the fitting and the water trap. Be sure not to lose it. Put the fitting and the gasket in a safe place. They will be reused with the new water trap.
12. Each side of the water trap has a push fitting. Press the collet of one of the push fittings toward the water trap and gently pull out the installed tubing. Do the same thing with the other push fitting.

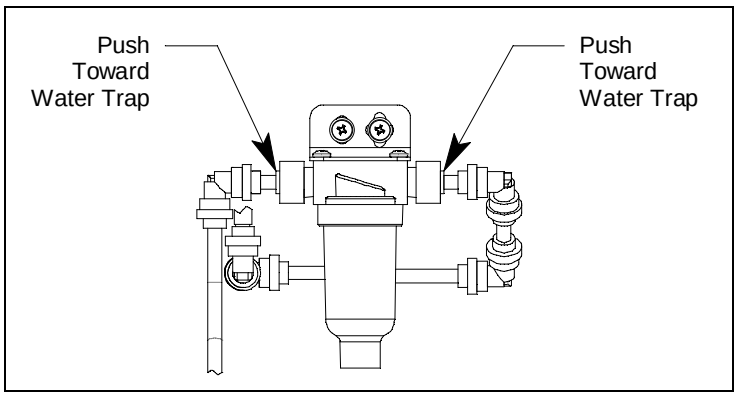

Figure 35: Internal Water Trap Push Fitting Removal

1.888.610.7664 www.calcert.com sales@calcert.com

13. Unscrew the 2 screws that retain the installation bracket to the mounting plate. There is a flat washer and a lock washer beneath each screw. Keep the screws, flat washers, and lock washers in a safe spot.

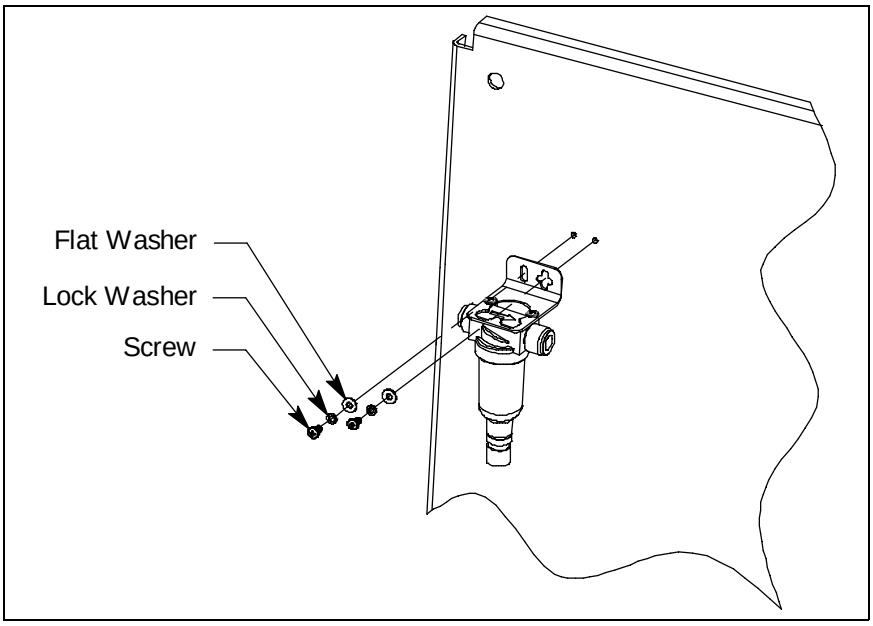

Figure 36: Removing Internal Water Trap Filter Bracket from Plate

14. Unscrew the 2 screws that retain the water trap to the installation bracket. Keep the screws in a safe spot while replacing the internal water trap.

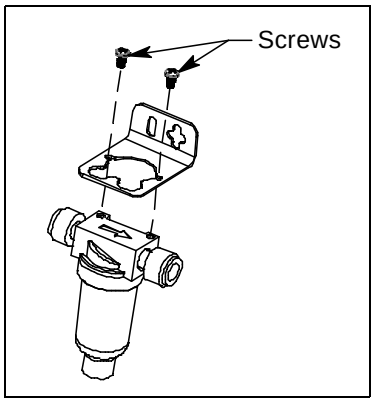

Figure 37: Internal Water Trap Screw Removal

15. Use a 11/16 inch wrench to unscrew the push fittings from the water trap.

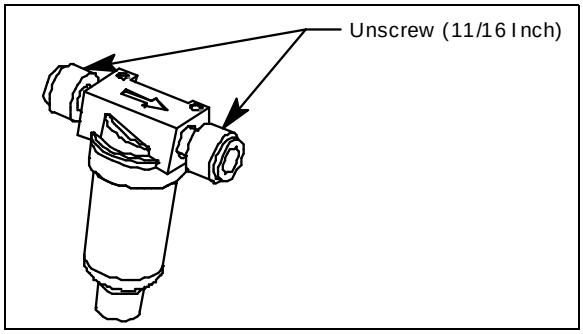

Figure 38: Internal Water Push Fitting Removal

1.888.610.7664 www.calcert.com sales@calcert.com

16. Discard the old water trap.
17. Screw the push fittings back into each side of the water trap using a 11/16 inch wrench being careful not to over-tighten the fittings. Use Teflon tape to seal the threads.
18. Connect the new water trap to the installation bracket using the 2 screws you removed in step 14. Be sure the arrow on the water trap is pointing to the right as shown below.

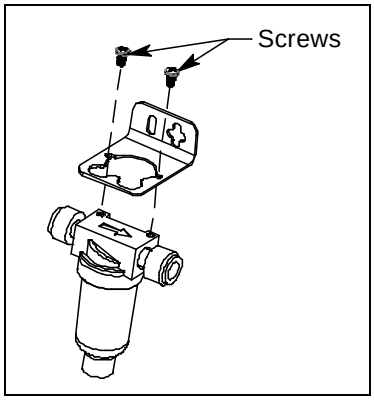

Figure 39: Installing New Water Trap to Installation Bracket

19. Reinstall the water trap/bracket assembly to the mounting plate using the screws, lock washers, and flat washers removed in step 13.

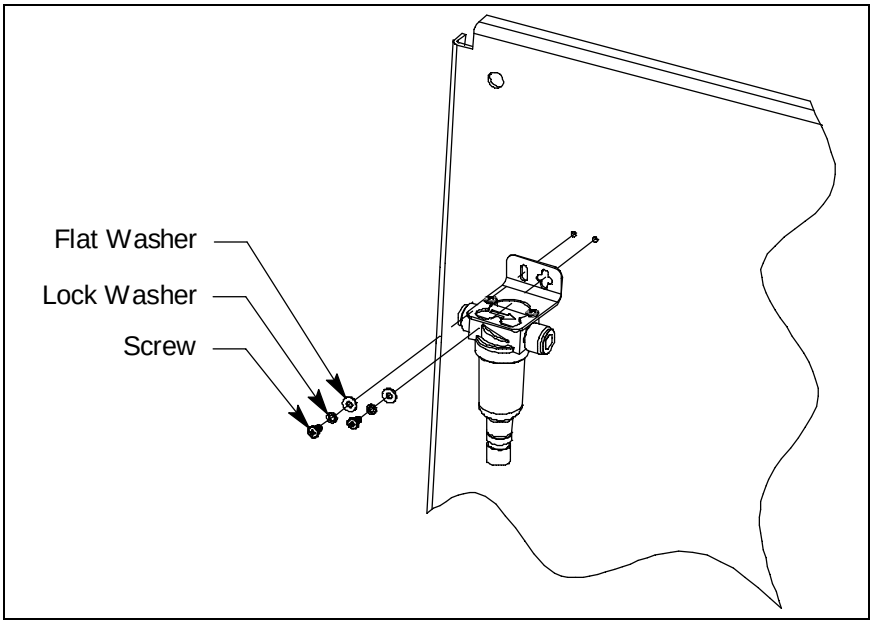

Figure 40: Reinstalling the Internal Water Trap Bracket

20. Reconnect the tubing on either side of the water trap by pushing the tubing into the push fitting until you feel it lock into place.
21. Screw the bottom fitting back into the bottom of the water trap using a 9/16 inch wrench. Be sure the gasket that was removed in step 11 is installed between the fitting and the water trap.
22. Insert the tubing with the ferrules into the fitting at the bottom of the water trap and use a 9/16 inch open-end wrench or adjustable wrench to tighten the nut while using a second 9/16 inch open-end wrench or adjustable wrench to hold the hex still.

1.888.610.7664 www.calcert.com sales@calcert.com

23. Reinstall the sample regulator/bracket assembly to the mounting plate using the screws, lock washers, and flat washers removed in step 7.

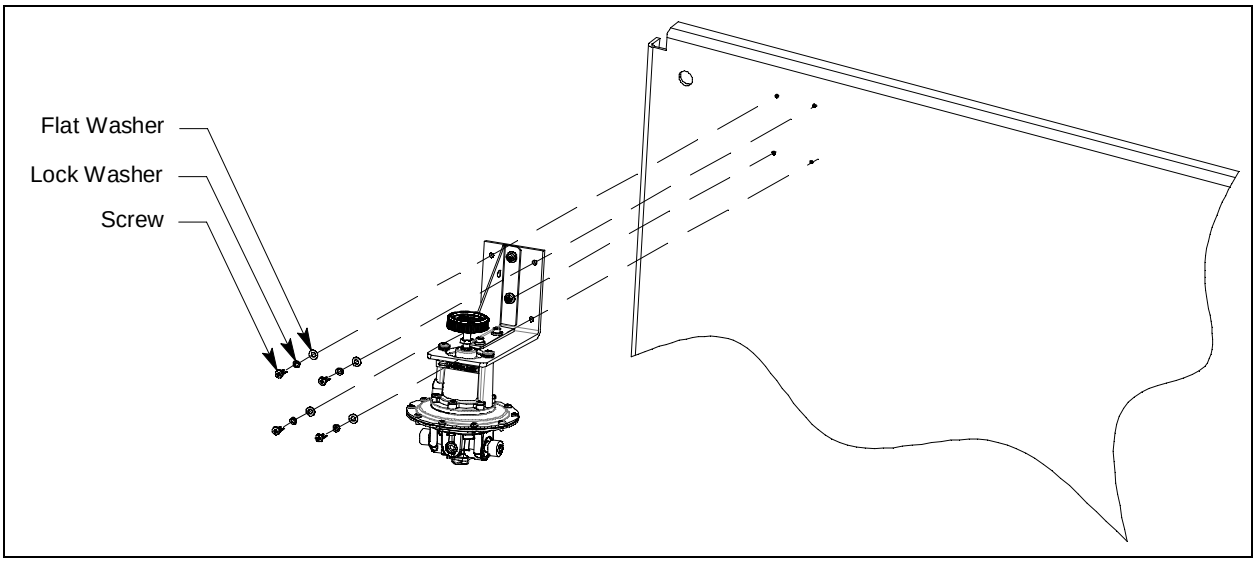

Figure 41: Reinstalling the Sample Regulator

24. Reconnect the tubing on either side of the sample regulator by pushing the tubing into the push fitting until you feel it lock into place.
25. Plug in or turn on all incoming power to the Digester Gas Monitor.
26. Place the Digester Gas Monitor's power switch in the ON position, then verify that the PILOT light is on.
27. Turn the flow regulator knob clockwise to set the sensor flow to 3 SCFH once the system has started up.
28. Close and secure the housing door.

Replacing the External Water Trap

These instructions describe how to replace the external water trap. The water trap's bracket and connected fittings will be reused. Use part number 33-0413RK when replacing the external water trap.

1. Turn off or unplug incoming power to the Digester Gas Monitor.
2. Open the Digester Gas Monitor housing door, then place the power switch in the OFF position.
3. Turn the flow regulator knob all the way counterclockwise to close the flow regulator's output.
4. Turn off the compressed air source.
5. Disconnect any installed flexible tubing from the hose barb on the bottom of the water trap.

1.888.610.7664 www.calcert.com sales@calcert.com

6. Starting with one of the fittings on either side of the water trap, hold the fitting still with a 5/8 inch wrench and unscrew the nut from the fitting using a 9/16 inch wrench. The nut will come off of the fitting when you pull the tubing away. A ferrule set is located inside the nut but will not come off. Repeat for the other fitting. If you want to install different tubing, cut the old tubing and use new ferrules when reinstalling the new tubing.

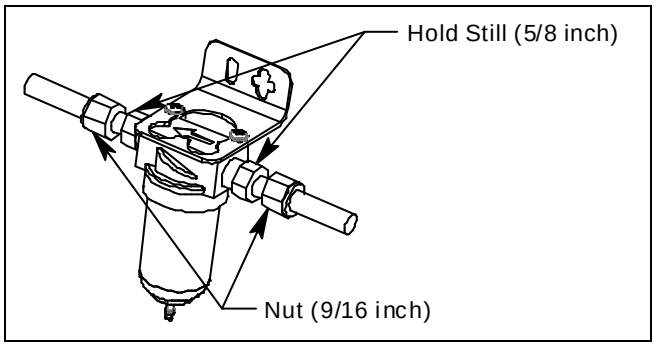

Figure 42: Nut Removal

7. Unscrew the 2 screws that retain the water trap to the installation bracket. Do not lose the screws.

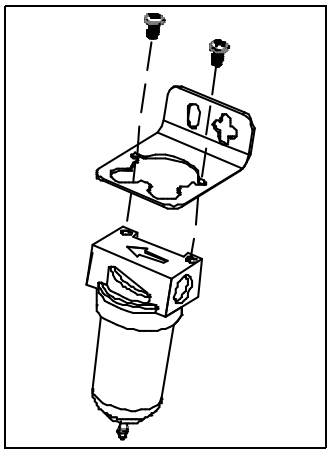

Figure 43: Bracket Screw Removal

8. Unscrew the fittings from each side of the water trap using a 5/8 inch wrench. Put the fittings in a safe place. They will be reused with the new water trap.

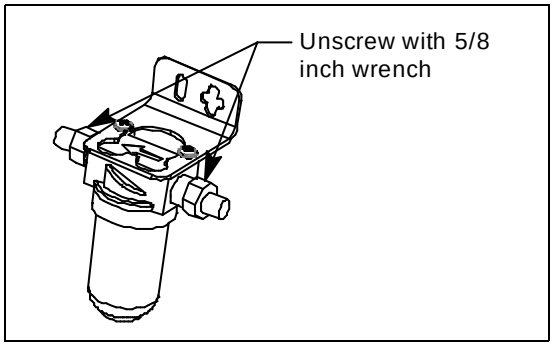

Figure 44: Fitting Removal

9. Discard the old water trap.
10. Screw the fittings back into the water trap using a 5/8 inch wrench. Use Teflon tape to seal the threads.

1.888.610.7664 www.calcert.com sales@calcert.com

11. Connect the new water trap to the installation bracket using the 2 screws you removed in step 7.
12. Screw each nut with connected tubing onto the fittings using a 9/16 inch wrench.
13. Reattach the flexible tubing to the hose barb on the bottom of the new water trap, if necessary.
14. Turn on the compressed air source.
15. Plug in or turn on all incoming power to the Digester Gas Monitor.
16. Place the Digester Gas Monitor's power switch in the ON position, then verify that the PILOT light is on.
17. Turn the flow regulator knob clockwise to set the sensor flow to 3 SCFH once the system has started up.
18. Close and secure the housing door.

Replacing the Fuses

The Digester Gas Monitor has two user serviceable AC fuses and one user serviceable DC fuse The replacement AC fuses must be rated to 6 A, 250 V,1/4 x 1 1/4 inch, fast acting. The replacement DC fuse must be rated to 10A, 250V, 1/4 x 1 1/4 inch, fast acting.

1. Turn off or unplug all incoming power to the Digester Gas Monitor.
2. Open the Digester Gas Monitor housing door, then place the power switch in the OFF position.
3. The fuses are located to the left of the AC in terminal strip.

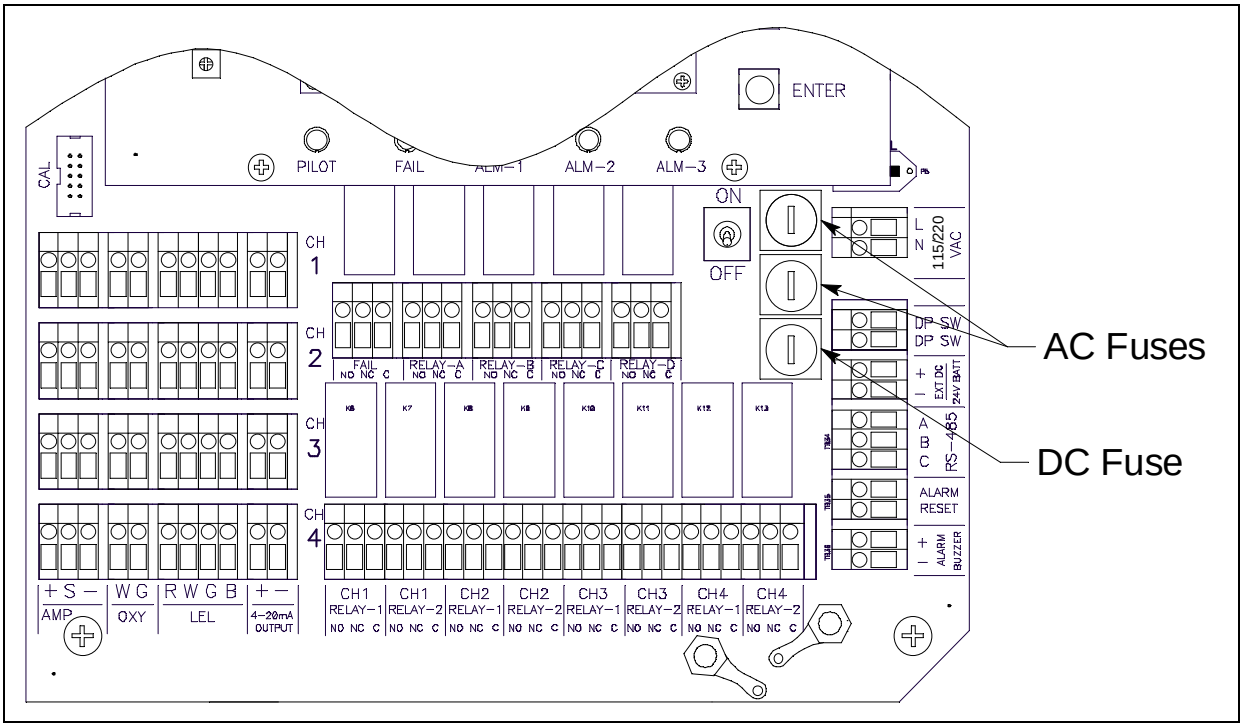

Figure 45: Fuse Location

4. Use a flat-blade screwdriver to rotate the applicable fuse holder 1/4 turn counterclockwise. The fuse holder releases from the socket.
5. Remove the fuse holder from the socket, then remove the fuse from the fuse holder.

1.888.610.7664 www.calcert.com sales@calcert.com

CAUTION: *Verify that the replacement fuses are the same type and rating as the fuses you are replacing. The Digester Gas Monitor's AC fuses are fast blow fuses rated for 6A, 250 V and the DC fuse is a fast blow fuse rated for 10A, 250V.*

6. Install the replacement fuse in the fuse holder, then place the fuse holder in the socket.
7. Push the fuse holder into the socket, then turn the holder 1/4 turn clockwise to secure it in the socket.
8. Plug in or turn on all incoming power to the Digester Gas Monitor.
9. Place the Digester Gas Monitor's power switch in the ON position, then verify that the PILOT light is on.
10. Close and secure the housing door.

1.888.610.7664 www.calcert.com sales@calcert.com

Parts List

Table 19 lists the part numbers and descriptions for replacement parts and accessories offered for the Digester Gas Monitor.

Table 19: Parts List, Digester Gas Monitor

Part No.	Description
06-1248RK	Sample tubing (3/16 in. x 5/16 in.; specify length when ordering)
06-1251RK	Sample tubing for aspirator/sample/blowback exhaust line (1/4 in. x 3/8 in.; specify length when ordering)
10-0450RK	Screw, 10/32 x 3/8 Phillips SS (for connecting internal water trap bracket to mounting plate)
10-0454RK	Screw, 10/32 x 5/8 Phillips SS (for connecting sample regulator bracket to mounting plate)
11-0251RK	Washer, split lock, #10 (for connecting internal water trap and sample regulator brackets to mounting plate)
11-0253RK	Washer, flat, #10 x .435 OD (for connecting internal water trap and sample regulator brackets to mounting plate)
17-2673RK	Front ferrule, for external water trap fittings
17-2678RK	Back ferrule, for external water trap fittings
18-0107RK	Conduit hub (3/4 in.)
33-0164RK	Oil mist filter
33-0167RK	Particle filter
33-0171RK	Hydrophobic filter
33-0413RK	External water trap replacement, without connecting fittings
33-0413RK-02	Water trap filter element
33-0413-12	Internal water trap replacement, without connecting fittings
43-0440RK	Reset switch
43-4170RK	AC fuse, 6A, 250 V, 1/4 x 1 1/4 inch, fast acting
43-4179RK	DC fuse, 10A, 250V, 1/4 x 1/4 inch, fast acting
51-0096RK	Horn/strobe, 10-33 VDC, NEMA 4X
52-1016RK	Buzzer
61-5040RK-05	IR CO_2 replacement plug-in sensor, 0 - 50% volume
61-5041RK-CH4	IR CH4 replacement plug-in sensor, 0 - 100% volume
65-2039RK	H_2S replacement sensor

1.888.610.7664 www.calcert.com sales@calcert.com

Table 19: Parts List, Digester Gas Monitor

Part No.	Description
71-0266RK	Digester Gas Monitor Operator's Manual (this document)
81-0013RK-05	Calibration cylinder, 50% vol. methane in nitrogen, 58-liter steel
81-0027-05	Calibration cylinder, 40% vol. CO_2 / 60% vol. methane, 58-liter
81-0078RK-03	Calibration cylinder, 100% nitrogen, 103-liter
81-0145RK-02	Calibration cylinder, 500 ppm H_2S, 58-liter
81-0145RK-16	Calibration cylinder, 500 ppm H_2S, 116-liter
81-0146RK-02	Calibration cylinder, 200 ppm H_2S, 58-liter
81-1054RK	Regulator, demand-flow type (for 34-liter aluminum and 58- and 103-liter calibration cylinders)
OS-B11	Oxygen replacement sensor

1.888.610.7664 www.calcert.com sales@calcert.com