1.888.610.7664 www.calcert.com sales@calcert.com

INOR

USER INSTRUCTIONS **English**

Isolation Transmitter

IsoPAQ-60P

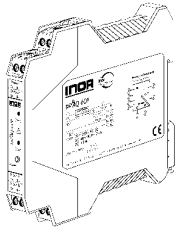

www.inor.com, www.inor.se

The user instruction must be read prior to adjust and/or installation
All information subject to change without notice.

This product should not be mixed with other kind of scrap, after usage.
It should be handled as an electronic/electric device.

MEASURE OF SUCCESS

IsoPAQ-60P

. Before Startup

When operating the isolating transmitter, certain parts of the module can carry dangerous voltage! Ignoring the warnings can lead to serious injury and/or cause damage!

The isolation transmitter should only be installed and put into operation by qualified staff. The staff must have studied the warnings in these operating instructions thoroughly.

The transmitter may not be put into operation if the housing is open. The adjustment with the potentiometer on the front may only be carried out with a screwdriver which is securely insulated against the input voltage!

In applications with high operating voltages sufficient distance and isolation as well as shock protection must be ensured.

Safe and trouble-free operation of this device can only be guaranteed if transport, storage and installation are carried out correctly and operation an maintenance are carried out with care.

Appropriate safety measures against electrostatic discharge (ESD) should be taken during range selection and assembly on the transmitter.

2. Short description

The 3-way isolation transmitter is used for electrical isolation and conversion of bipolar and unipolar process signals. Input and output range can be set by using DIP switch. The Zero/Span Adjustment on the front allows a fine-tuning of the measurement signal and the recalibration after a range selection.

The 3-way isolation guarantees reliable decoupling of the sensor circuit from the processing circuit and prevents linked measurement circuits from influencing each other. The Protective Separation with high isolation level provides protection for personnel and downstream devices against impermissibly high voltage.

3. Functioning

The input signal is modulated and then electrically decoupled using a transformer. The isolated signal is then made available at the output, demodulated, filtered and amplified.

4. Configuration

4.1 Equipment

A screwdriver with a width of 2.5 mm is required to open the unit and to connect the wires to the screw clamp terminals.

4.1 Opening the unit

Using a screwdriver, release the snap fittings of the upper part of the housing on both sides (1). The upper part of the housing and the electronics can now be pulled out by approximately 3 cm (2).

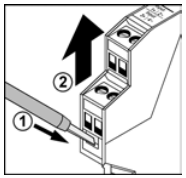

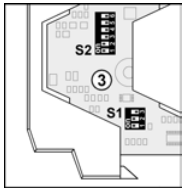

4.3 Settings

Set the input and output ranges with DIP switch (3) as indicated in the following table:

Input	Switch S1 1	2	3
○ ± 10 V	●		
0 to 10 V			
2 to 10 V			●
± 5 V	●	●	
0 to 5 V		●	
1 to 5 V		●	●
± 20 mA	●		
0 to 20 mA			
4 to 20 mA			●
± 10 mA	●	●	
0 to 10 mA		●	
2 to 10 mA		●	●
Zero Pot: ± 10 % of range			
Span Pot: ± 10 % of range			

Output	Switch S2 1	2	3	4	5	6
○ ± 10 V			●		●	●
0 to 10 V					●	●
2 to 10 V				●	●	●
± 5 V		●	●		●	●
0 to 5 V		●			●	●
1 to 5 V		●		●	●	●
± 20 mA			●			
0 to 20 mA						
4 to 20 mA				●		
± 10 mA		●	●			
0 to 10 mA		●				
2 to 10 mA		●		●		
○ Bandwidth 10 kHz						
Bandwidth 30 Hz	●					

○: factory setting ▬: customer setting

After each range selection a Zero/Spam Adjustment ought to be executed!

5. Mounting, electrical connection

The isolation transmitter is mounted on standard 35 mm DIN rail.

Terminal assignments

1	Input + I	5	Output +
2	Input - I	6	Output -
3	Input + U	7	Power supply ≅
4	Input - U	8	Power supply ≅

Warning!
Do not operate inputs for current and voltage simultaneously!

6. Order information

Product	*Input / Output*	*Part No.*
IsoPAQ-60P	Extensive range selection	70ISP60001

7. Technical Data

Input	**Voltage**		**Current**	
Input signal (terminal/switch selectable)	**± 10 V**	± 5 V	± 20 mA	± 10 mA
	0 - 10 V	0 - 5 V	0 - 20 mA	0 - 10 mA
	2 - 10 V	1 - 5 V	4 - 20 mA	2 - 10 mA
Input resistance	Approx. 1 MΩ		Approx. 22 Ω	
Input capacitance	Approx. 1 nF		Approx. 1 nF	
Overload	Voltage limitation via 30 V Z-Diode, max. continuous current 30 mA		≤ 200 mA	
Output	**Voltage**		**Current**	
Output signal (switch selectable)	**± 10 V**	± 5 V	± 20 mA	± 10 mA
	0 - 10 V	0 - 5 V	0 - 20 mA	0 - 10 mA
	2 - 10 V	1 - 5 V	4 - 20 mA	2 - 10 mA
Load	≤ 10 mA (1 kΩ @ 10 V)		≤ 12 V (600 Ω @ 20 mA)	
Linear transmission range	Unipolar: -2 to + 110%		Bipolar: -110 to +110%	
Ripple	< 20 mV_{rms}			
General data				
Transmission error	± 0,1 % of end value			
Temperature coefficient[2]	± 0,01 %/K of end value			
Zero/Span adjustment	± 10 % of end value			
Cut-off frequency (-3 dB)	**> 10 kHz**[1] Switchable to approx. 30 Hz			
Test voltage	4 kV, 50 Hz Input against output against power supply			
Working voltage[3] (Basic insulation)	1000 V AC/DC for overvoltage category II and contamination class 2 acc. to EN 61010 part 1			
Protection against dangerous body currents[3]	Protective Separation by reinforced insulation acc. to EN 61010 part 1 up to 600 V AC/DC for overvoltage category II and contamination class 2 between input and output and power supply.			
Ambient temperature	Operation - 20 °C to + 70 °C (-4 to 158 °F) Transport and storage - 35 °C to + 85 °C (-31 to 185 °F)			
Power supply	20 to 253 V AC/DC AC 48 ... 62 Hz, approx. 2 VA DC approx. 1,0 W			
EMC[4]	EN 61326 -1			
Construction	12,5 mm (0.5'') housing, protection type: IP 20			
Connection	≤ 2.5 mm^2, AWG 14			
Weight	Approx. 100 g			

1) **factory setting**
2) Average TC in specified operating temperature range
3) As far as relevant the standards and rules mentioned above are considered by development and production of our devices. In addition relevant assembly rules are to be considered by installation of our devices in other equipments. For applications with high working voltages, take measures to prevent accidental contact and make sure that there is sufficient distance or insulation between adjacent situated devices.
4) Minor deviations possible during interference

8. Block diagram

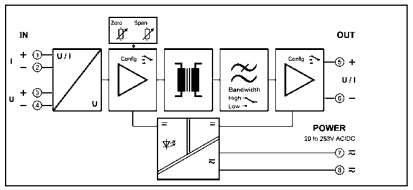

9. Dimensions

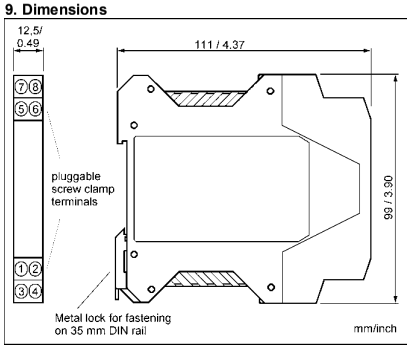

LIMITED WARRANTY

INOR Process AB, or any other affiliated company within the Inor Group (hereinafter jointly referred to as "Inor"), hereby warrants that the Product will be free from defects in materials or workmanship for a period of **five (5) years** from the date of delivery ("Limited Warranty"). This Limited Warranty is limited to repair or replacement at Inor's option and is effective only for the first end-user of the Product. Upon receipt of a warranty claim, Inor shall respond within a reasonable time period as to its decision concerning:

1. Whether Inor acknowledges its responsibility for any asserted defect in materials or workmanship; and, if so,
2. the appropriate cause of action to be taken (i.e. whether a defective product should be replaced or repaired by Inor).

This Limited Warranty applies only if the Product:

1. is installed according to the instructions furnished by Inor;
2. is connected to a proper power supply;
3. is not misused or abused; and
4. there is no evidence of tampering, mishandling, neglect, accidental damage, modification or repair without the approval of Inor or damage done to the Product by anyone other than Inor.

This Limited Warranty is provided by Inor and contains the only express warranty provided.

INOR SPECIFICALLY DISCLAIMS ANY EXPRESS WARRANTY NOT PROVIDED HEREIN AND ANY IMPLIED WARRANTY, GUARANTEE OR REPRESENTATION AS TO SUITABILITY FOR ANY PARTICULAR PURPOSE, PERFORMANCE, QUALITY AND ABSENCE OF ANY HIDDEN DEFECTS, AND ANY REMEDY FOR BREACH OF CONTRACT, WHICH BUT FOR THIS PROVISION, MIGHT ARISE BY IMPLICATION, OPERATION OF LAW, CUSTOM OF TRADE OR COURSE OF DEALING, INCLUDING IMPLIED WARRANTIES OF MERCHANTABILITY AND FITNESS FOR A PARTICULAR PURPOSE. EXCEPT AS PROVIDED HEREIN, INOR FURTHER DISCLAIMS ANY RESPONSIBILITY FOR LOSSES, EXPENSES, INCONVENIENCES, SPECIAL, DIRECT, SECONDARY OR CONSEQUENTIAL DAMAGES ARISING FROM OWNERSHIP OR USE OF THE PRODUCT.

Products that are covered by the Limited Warranty will either be repaired or replaced at the option of Inor. Customer pays freight to Inor, and Inor will pay the return freight by post or other "normal" way of transport. If any other type of return freight is requested, customer pays the whole return cost.

86BIS00029 2008-02