Installation and Instruction Manual
ESCO PART # 10543

Calcium Chloride Pump

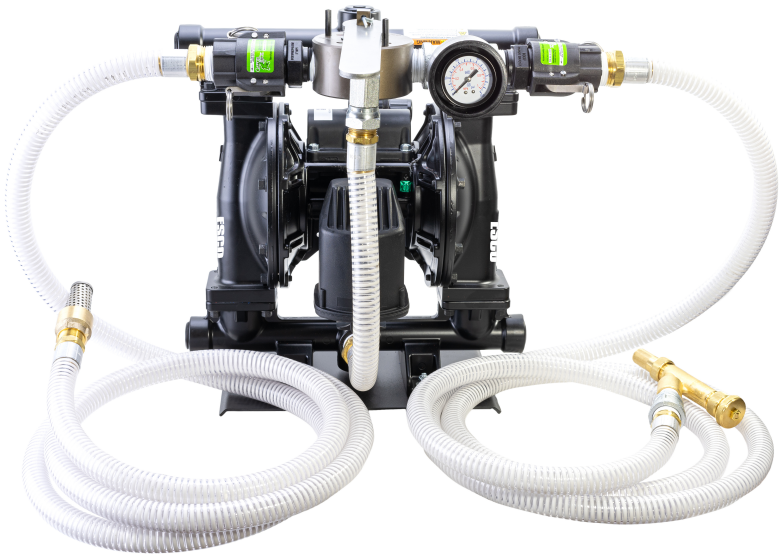

WARNING
SAFETY PRECAUTION

This product, as well as all Tire Tools, should never be used by persons unless they have been trained properly according to O.S.H.A. Regulation #29CFR 1910.177 entitled "Servicing Single-Piece & Multipiece Rim Wheels." Copy of the Regulation is enclosed or contact this manufacturer.

SAFETY CAGE OR RESTRAINING DEVICE FROM O.S.H.A. REQUIREMENTS AS WRITTEN IN #29CFR 1910.177 SERVICING MULTIPIECE AND SINGLE PIECE RIM/ TIRES

(D) TIRE SERVICING EQUIPMENT

(1) The employer shall furnish a restraining device for inflation tires on all multi-piece and single piece wheels.

(2) The employer shall provide a restraining device or barrier for inflation tires on single piece wheels unless the rim wheel will be bolted onto a veh cle during inflation.

(3) Restraining devices and barriers shall comply with the following requirements:

(i) Each restraining device or barrier shall have the capacity to withstand the maximum force that would be transferred to it during a rim wheel separation occurring at 150 percent of the maximum tire specification pressure for the type of rim wheel being serviced.

(ii) Restraining device and barriers shall be capable of preventing the rim wheel components from being thrown outside or beyond the device or barrier for any rim wheel positioned within or behind the device;

(iii) Restraining devices and barriers shall be visually inspected prior to each day's use and after any separation of the rim wheel components or sudden release of contained air.

ESCO	**10543 CALCIUM CHLORIDE PUMP**
	OPERATION MANUAL

Husky® 1050 Air-Operated Diaphragm Pump

1-inch pump with modular air valve for fluid transfer applications

125 psi (0.86 MPa, 8.6 bar) Maximum Fluid Working Pressure
125 psi (0.86 MPa, 8.6 bar) Maximum Air Input Pressure

Important Safety Instructions
Read all warnings and instructions in this manual. Save these instructions.

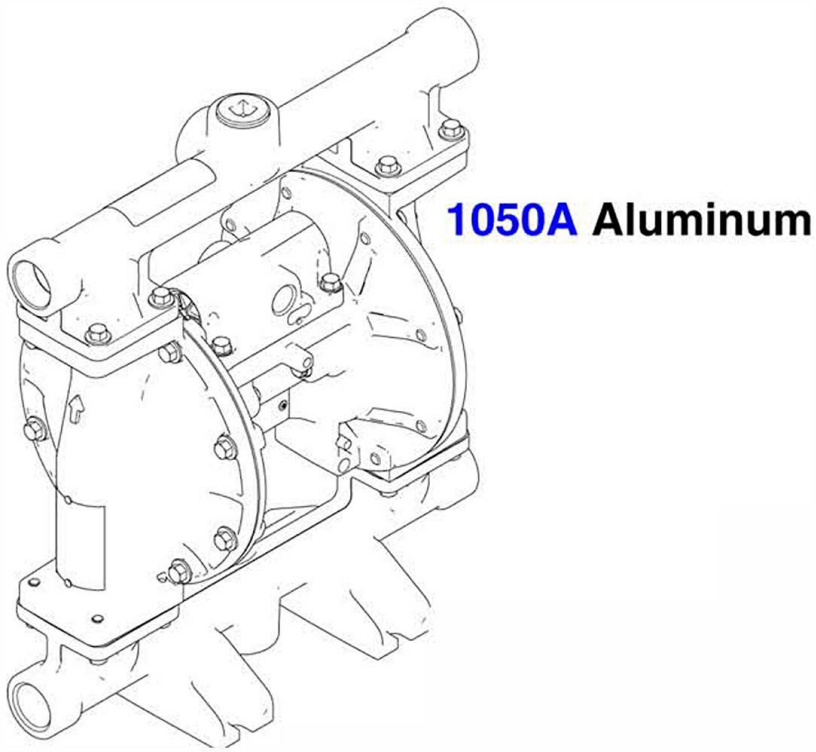

HO03

1.888.610.7664 www.calcert.com sales@calcert.com

Warnings

The following warnings are for the setup, use, grounding, maintenance, and repair of this equipment. The exclamation point symbol alerts you to a general warning and the hazard symbol refers to procedure-specific risk. Refer back to these warnings. Additional, product-specific warnings may be found throughout the body of this manual where applicable.

WARNING

FIRE AND EXPLOSION HAZARD

Flammable fumes, such as solvent and paint fumes, in **work area** can ignite or explode. To help prevent fire and explosion:

- Use equipment only in well ventilated area.
- Eliminate all ignition sources; such as pilot lights, cigarettes, portable electric lamps, and plastic drop cloths (potential static arc).
- Keep work area free of debris, including solvent, rags and gasoline.
- Do not plug or unplug power cords, or turn power or light switches on or off when flammable fumes are present.
- Ground all equipment in the work area. See **Grounding** instructions.
- Use only grounded hoses.
- Hold gun firmly to side of grounded pail when triggering into pail.
- If there is static sparking or you feel a shock, **stop operation immediately.** Do not use equipment until you identify and correct the problem.
- Keep a working fire extinguisher in the work area.

Static charge may build up on plastic parts during cleaning and could discharge and ignite flammable materials and gases. To help prevent fire and explosion:

- Clean plastic parts in a well ventilated area.
- Do not clean with a dry cloth.

WARNING

TOXIC FLUID OR FUMES HAZARD

Toxic fluids or fumes can cause serious injury or death if splashed in the eyes or on skin, inhaled, or swallowed.

- Read MSDS's to know the specific hazards of the fluids you are using.
- Route exhaust away from work area. If diaphragm ruptures, fluid may be exhausted with air.
- Store hazardous fluid in approved containers, and dispose of it according to applicable guidelines.
- Always wear impervious gloves when spraying or cleaning equipment.

BURN HAZARD

Equipment surfaces and fluid that's heated can become very hot during operation. To avoid severe burns:

- Do not touch hot fluid or equipment.
- Wait until equipment/fluid has cooled completely.

PERSONAL PROTECTIVE EQUIPMENT

You must wear appropriate protective equipment when operating, servicing, or when in the operating area of the equipment to help protect you from serious injury, including eye injury, inhalation of toxic fumes, burns, and hearing loss. This equipment includes but is not limited to:

- Clothing and respirator as recommended by the fluid and solvent manufacturer
- Protective eyewear, gloves, and hearing protection

Installation

The Typical Installations shown in Fig. 3 and Fig. 4 are only guides for selecting and installing system components. Contact your **ESCO** distributor for assistance in planning a system to suit your needs.

Tighten Fasteners Before Setup

Before using the pump for the first time, check and retorque all external fasteners.

1.888.610.7664 www.calcert.com sales@calcert.com

⚠ WARNING

EQUIPMENT MISUSE HAZARD

Misuse can cause death or serious injury.

- Do not operate the unit when fatigued or under the influence of drugs or alcohol.
- Do not exceed the maximum working pressure or temperature rating of the lowest rated system component. See **Technical Data** in all equipment manuals.
- Use fluids and solvents that are compatible with equipment wetted parts. See **Technical Data** in all equipment manuals. Read fluid and solvent manufacturer's warnings. For complete information about your material, request MSDS from distributor or retailer.
- Do not leave the work area while equipment is energized or under pressure. Turn off all equipment and follow the **Pressure Relief Procedure** in this manual when equipment is not in use.
- Check equipment daily. Repair or replace worn or damaged parts immediately with genuine manufacturer's replacement parts only.
- Do not alter or modify equipment.
- Use equipment only for its intended purpose. Call your distributor for information.
- Route hoses and cables away from traffic areas, sharp edges, moving parts, and hot surfaces.
- Do not kink or over bend hoses or use hoses to pull equipment.
- Keep children and animals away from work area.
- Comply with all applicable safety regulations.

PRESSURIZED EQUIPMENT HAZARD

Fluid from the gun/dispense valve, leaks, or ruptured components can splash in the eyes or on skin and cause serious injury.

- Follow **Pressure Relief Procedure** in this manual, when you stop spraying and before cleaning, checking, or servicing equipment.
- Tighten all fluid connections before operating the equipment.
- Check hoses, tubes, and couplings daily. Replace worn or damaged parts immediately.

PRESSURIZED ALUMINUM PARTS HAZARD

Use of fluids that are incompatible with aluminum in pressurized equipment can cause serious chemical reaction and equipment rupture. Failure to follow this warning can result in death, serious injury, or property damage.

- Do not use 1,1,1-trichloroethane, methylene chloride, other halogenated hydrocarbon solvents or fluids containing such solvents.
- Many other fluids may contain chemicals that can react with aluminum. Contact your material supplier for compatibility.

PLASTIC PARTS CLEANING SOLVENT HAZARD

Use only compatible water-based solvents to clean plastic structural or pressure-containing parts. Many solvents can degrade plastic parts and cause them to fail, which could cause serious injury or property damage. See **Technical Data** in this and all other equipment instruction manuals. Read fluid and solvent manufacturer's warnings.

ESCO

1.888.610.7664 www.calcert.com sales@calcert.com

Maintenance:

Flush pump with fresh water after each use to prolong life.

No lubrication required. Periodically drain debris from filter/regulator bowl. Periodically inspect pump for excessive wear or damage, mainly to the diaphragms, check balls, and valve seats.

Operation:

Install air regulator provided into 1/2" NPT opening in top of pump.

Install muffler into 3/4" NPT opening in bottom of pump.

Connect air supply to air inlet side of pump and set pressure to 40 - 60 p.s.i. Speed of pump is determined by pressure to pump. (Do not exceed 100 p.s.i.) The fluid direction (fill or evac) of pump is controlled by turning the blue handle on the valve at top of pump a 1/4 turn left or right. Neutral is in center. As tire is being filled, the pressure inside the tire will increase. To release internal tire pressure, turn the valve a 1/4 turn to the evacuation position till pressure is relieved. The resume filling tire until full to valve.

Caution:
Do not exceed recommended air pressure for the tire being filled. (Over inflation of the tire can result in personal injury).

To Fill Tires:

Valve Stem Level (Approximately 80% Fill)

a. Turn tire until valve is at 12 o'clock position.

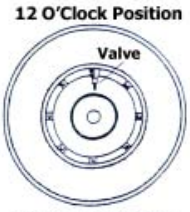

Stem Level Filling

b. See that the supply hose (10 ft. length) is in calcium tank, well below the liquid level.

c. Connect air supply to pump, start pump. During filling, the tire pressure can be checked at any time by turning Neutral position. Pressure shown on pressure gauge.

d. Continue filling until tire is half full of liquid. This can be determined by tapping tire sidewall or by checking the amount of liquid pumped against total quality. Turn control to Evacuate and allow trapped air to vent out through overflow than turn clock back to **FILL** direction.

e. Continue to fill until liquid is slightly beyond stem level.

Mounting

- The pump exhaust air may contain contaminants. Ventilate to a remote area.
- Never move or lift a pump under pressure. If dropped, the fluid section may rupture. Always follow the **Pressure Relief Procedure**

1. Be sure the mounting surface can support the weight of the pump, hoses, and accessories, as well as the stress caused during operation.
2. For all mountings, be sure the pump is bolted directly to the mounting surface.
3. For ease of operation and service, mount the pump so air valve, air inlet, fluid inlet and fluid outlet ports are easily accessible.

Grounding

The equipment must be grounded. Grounding reduces the risk of static and electric shock by providing an escape wire for the electrical current due to static build up or in the event of a short circuit.

Pump: See FIG. 1. Loosen the grounding screw (GS). Insert one end of a 12 ga. minimum ground wire (R) behind the grounding screw and tighten the screw securely. Connect the clamp end of the ground wire to a true earth ground.

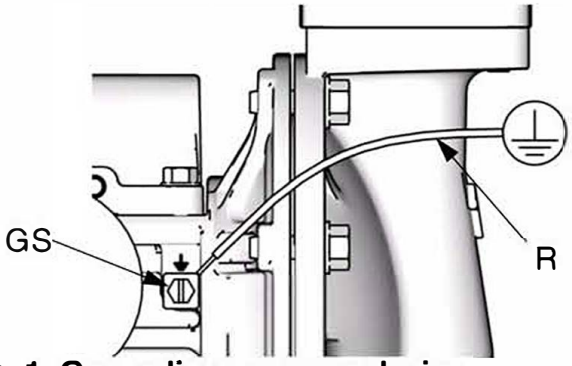

FIG. 1. Grounding screw and wire

Air and fluid hoses: Use only grounded hoses with a maximum of 500 ft (150 m) combined hose length to ensure grounding continuity.

Air compressor: Follow manufacturer's recommendations.

Fluid supply container: Follow local code.

Solvent pails used when flushing: Follow local code. Use only conductive metal pails, placed on a grounded surface. Do not place the pail on a nonconductive surface, such as paper or cardboard, which interrupts grounding continuity.

1.888.610.7664 www.calcert.com sales@calcert.com

Check your system electrical continuity after the initial installation, and then set up a regular schedule for checking continuity to be sure proper grounding is maintained.

Air Line

1. Install an air regulator (C) and gauge to control the fluid pressure. The fluid stall pressure will be the same as the setting of the air regulator.

2. Locate a bleed-type master air valve (B) close to the pump and use it to relieve trapped air. Be sure the valve is easily accessible from the pump and located downstream from the regulator.

Trapped air can cause the pump to cycle unexpectedly, which could result in serious injury from splashing.

3. Locate another master air valve (E) upstream from all air line accessories and use it to isolate them during cleaning and repair.

4. An air line filter (F) removes harmful dirt and moisture from the compressed air supply.

5. Install a grounded, flexible air hose (A) between the accessories and the 1/2 npt(f) pump air inlet (D). Use a minimum 3/8 in. (10 mm) ID air hose.

Air Exhaust Ventilation

The air exhaust port is 3/4 npt(f). Do not restrict the air exhaust port. Excessive exhaust restriction can cause erratic pump operation.

To provide a remote exhaust:

1. Remove the muffler (T) from the pump air exhaust port.

2. Install a grounded air exhaust hose (U) and connect the muffler (T) to the other end of the hose. The minimum size for the air exhaust hose is 3/4 in. (19 mm) ID. If a hose longer than 15 ft (4.57 m) is required, use a larger diameter hose. Avoid sharp bends or kinks in the hose.

3. Place a container at the end of the air exhaust line to catch fluid in case a diaphragm ruptures. If the diaphragm ruptures, the fluid being pumped will exhaust with the air.

1.888.610.7664 www.calcert.com sales@calcert.com

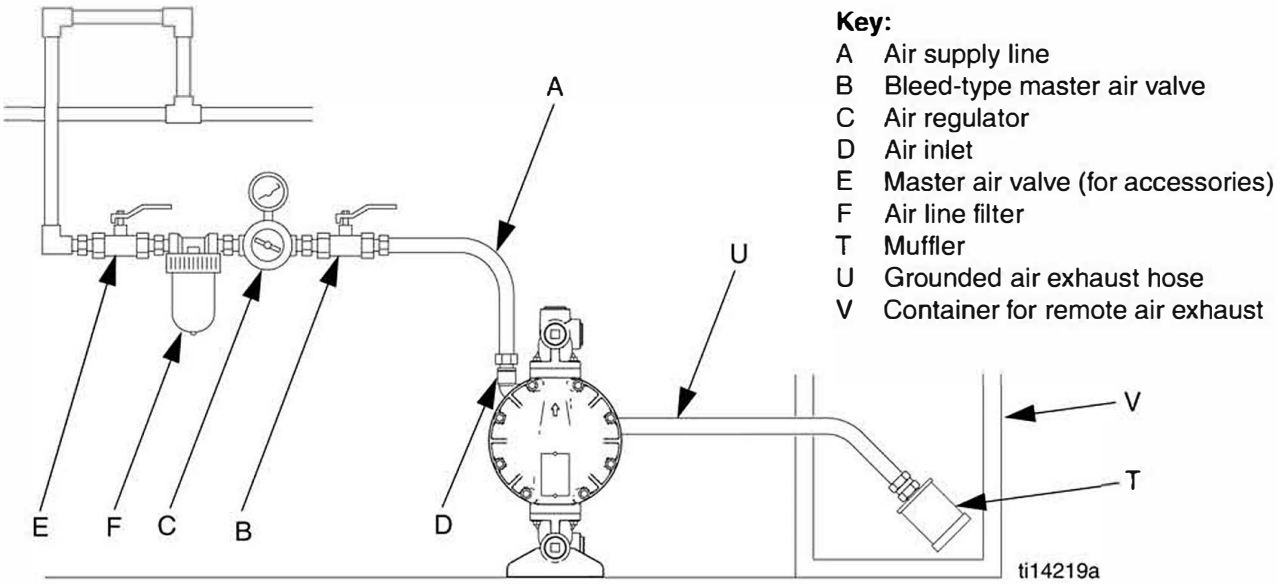

FIG. 2. Vent exhaust air

Fluid Supply Line

See FIG. 3 and FIG. 4.

1. Use grounded fluid supply lines (G). See **Grounding**, page 7.
2. If the inlet fluid pressure to the pump is more than 25% of the outlet working pressure, the ball check valves will not close fast enough, resulting in inefficient pump operation.
3. At inlet fluid pressures greater than 15 psi (0.1 MPa, 1 bar), diaphragm life will be shortened.
4. For maximum suction lift (wet and dry), see **Technical Data**

Fluid Outlet Line

See FIG. 3 and FIG. 4

1. Use grounded fluid hoses (L). See **Grounding**
2. Install a fluid drain valve (J) near the fluid outlet.
3. Install a shutoff valve (K) in the fluid outlet line.

1.888.610.7664 www.calcert.com sales@calcert.com

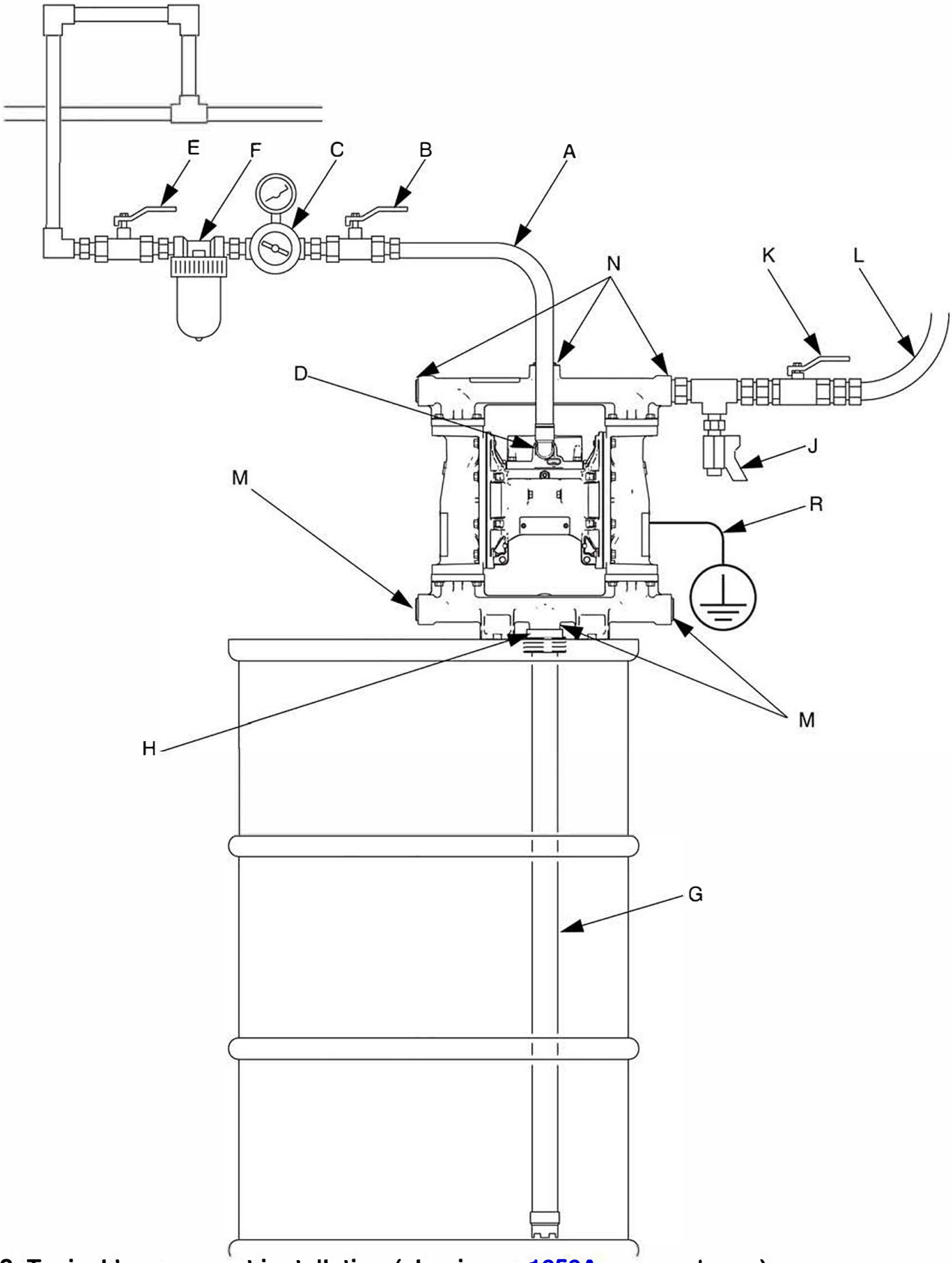

FIG. 3. Typical bung-mount installation (aluminum, 1050A, pump shown)

1.888.610.7664 www.calcert.com sales@calcert.com

Performance Charts

Test Conditions: Pump tested in water with inlet submerged.

Operating Air Pressure

A
125 psi (0.83 MPa, 8.3 bar)

B
100 psi (0.7 MPa, 7.0 bar)

C
70 psi (0.48 MPa, 4.8 bar)

D
40 psi (0.28 MPa, 2.8 bar)

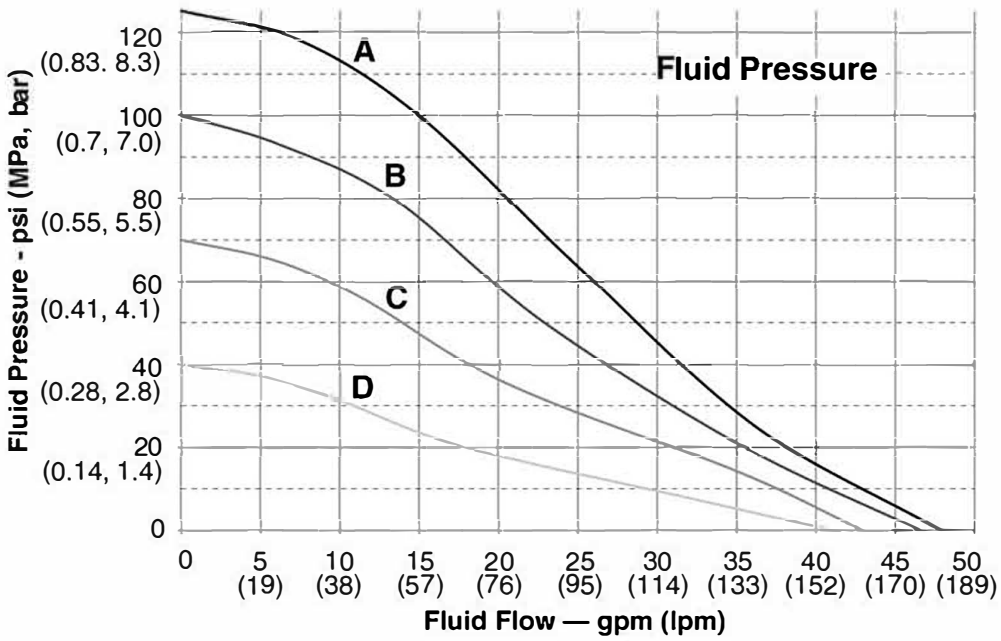

How to Read the Charts

1. Locate fluid flow rate along bottom of chart.
2. Follow vertical line up to intersection with selected operating air pressure curve.
3. Follow left to scale to read **fluid outlet pressure** (top chart) or **air consumption** (bottom chart).

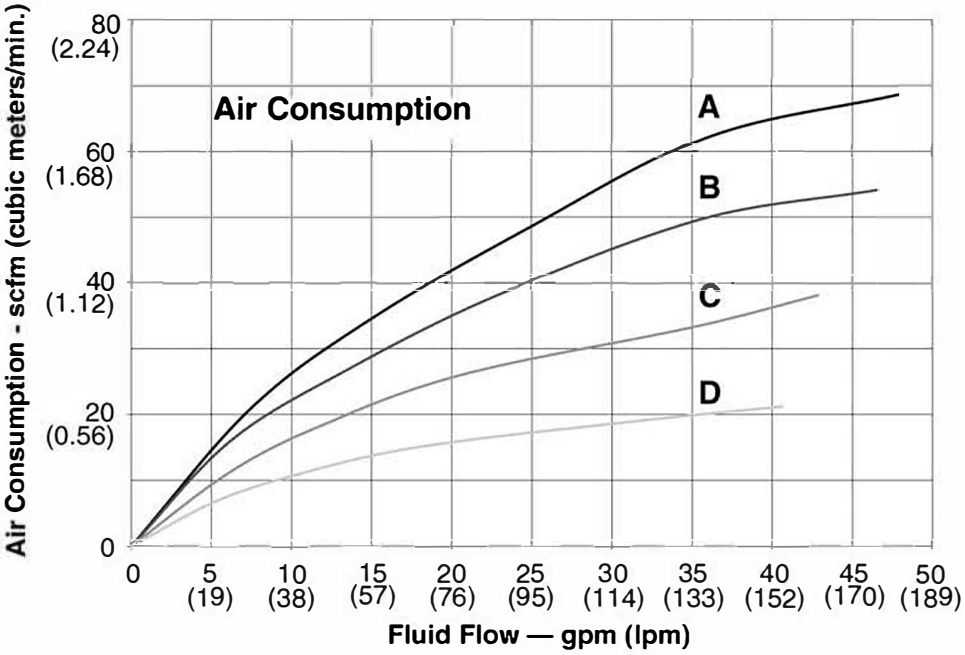

Dimensions and Mounting

Aluminum (1050A)

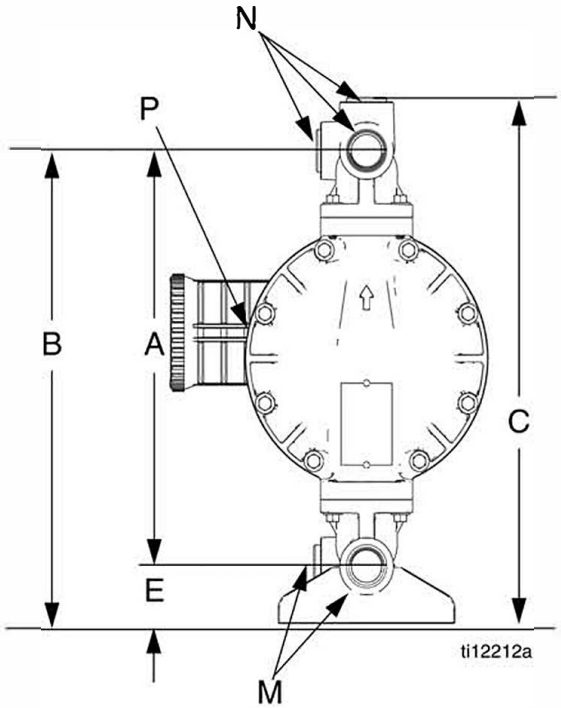

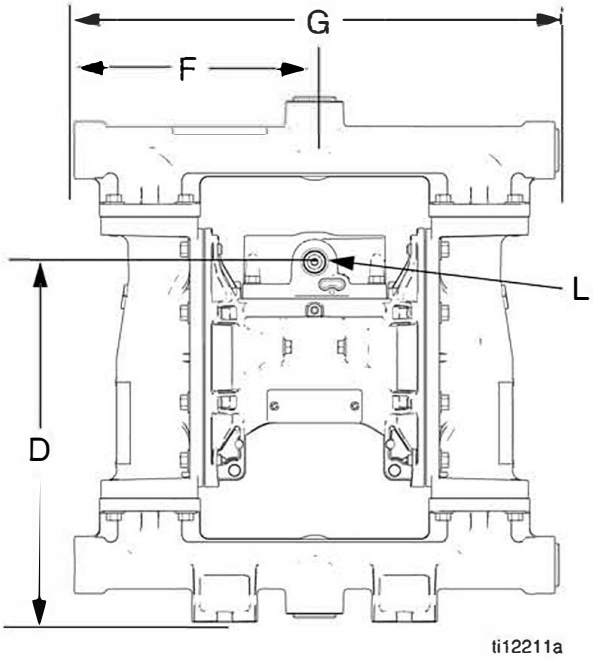

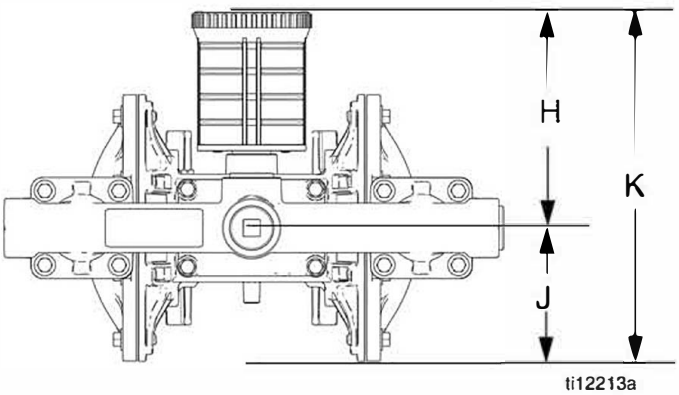

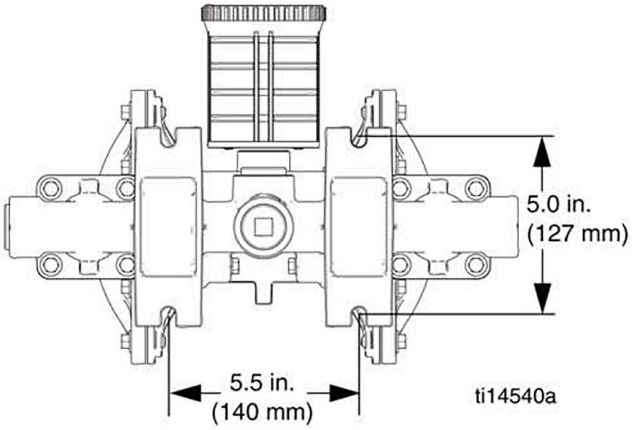

A ..... 12.7 in. (323 mm)
B ..... 14.4 in. (366 mm)
C ..... 15.9 in. (404 mm)
D ..... 10.9 in. (277 mm)
E..... 1.8 in. (46 mm)
F..... 7.3 in. (185 mm)
G ..... 14.7 in. (373 mm)
H ..... 6.1 in. (155 mm)

J ..... 3.9 in. (99 mm)
K..... 10.0 in. (254 mm)
L ..... 1/2 npt(f) air inlet
M .... 1 in. npt(f) or 1 in. bspt fluid inlet ports (4)
N..... 1 in. npt(f) or 1 in. bspt fluid outlet ports (4)
P ..... 3/4 npt(f) air exhaust port

10. If you are flushing, run the pump long enough to thoroughly clean the pump and hoses.

11. Close the dispensing valve, if used.

12. Close the bleed-type master air valve.

13. *Pumps with runaway protection:* Disable the prime/flush function by pushing the prime/flush button on the DataTrak.

Pump Shutdown

At the end of the work shift and before you check, adjust, clean or repair the system, follow **Pressure Relief Procedure**

Maintenance

Maintenance Schedule

Establish a preventive maintenance schedule, based on the pump's service history. Scheduled maintenance is especially important to prevent spills or leakage due to diaphragm failure.

Lubrication

The pump is lubricated at the factory. It is designed to require no further lubrication for the life of the pump.

Flushing and Storage

- Flush before fluid can dry in the equipment, at the end of the day, before storing, and before repairing equipment.
- Flush at the lowest pressure possible. Check connectors for leaks and tighten as necessary.
- Flush with a fluid that is compatible with the fluid being dispensed and the equipment wetted parts.

Flush the pump often enough to prevent the fluid you are pumping from drying or freezing in the pump and damaging it. Use a compatible solvent.

Always flush the pump and relieve the pressure before storing it for any length of time.

1.888.610.7664 www.calcert.com sales@calcert.com

Operation

Pressure Relief Procedure

Trapped air can cause the pump to cycle unexpectedly, which could result in serious injury from splashing.

1. Shut off the air supply to the pump.
2. Open the dispensing valve, if used.
3. Open the fluid drain valve to relieve fluid pressure. Have a container ready to catch the drainage.

Flush the Pump Before First Use

The pump was tested in water. If water could contaminate the fluid you are pumping, flush the pump thoroughly with a compatible solvent.

Tighten Fasteners Before Setup

Before using the pump for the first time, check and retorque all external fasteners. After the first day of operation, retorque the fasteners.

Starting and Adjusting the Pump

1. Be sure the pump is properly grounded. Refer to **Grounding**
2. Check fittings to be sure they are tight. Use a compatible liquid thread sealant on male threads. Tighten fluid inlet and outlet fittings securely.
3. Place the suction tube (if used) in fluid to be pumped.

NOTE: If fluid inlet pressure to the pump is more than 25% of outlet working pressure, the ball check valves will not close fast enough, resulting in inefficient pump operation.

4. Place the end of the fluid hose into an appropriate container.
5. Close the fluid drain valve.
6. Back out the air regulator knob, and open all bleed-type master air valves.
7. If the fluid hose has a dispensing device, hold it open.
8. *Pumps with runaway protection:* Enable the prime/flush function by pushing the prime/flush button on the DataTrak.
9. Slowly increase air pressure with the air regulator until the pump starts to cycle. Allow the pump to cycle slowly until all air is pushed out of the lines and the pump is primed.

1.888.610.7664 www.calcert.com sales@calcert.com

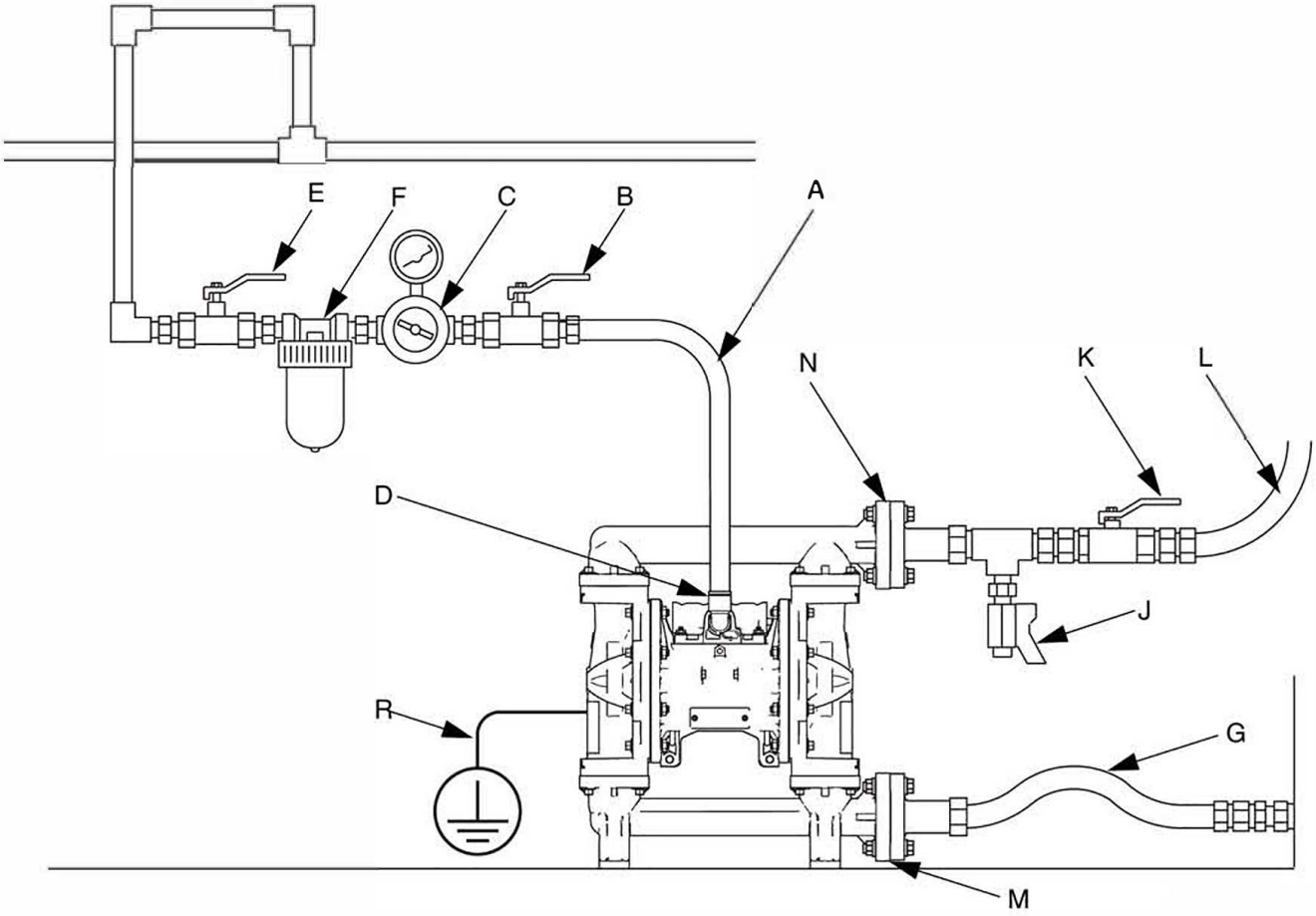

FIG. 4. Typical floor-mount installation (polypropylene, 1050P, pump shown)

Key for FIG. 3 and FIG. 4:

A Air supply line
B Bleed-type master air valve (required for pump)
C Air regulator
D Air inlet
E Master air valve (for accessories)
F Air line filter
G Fluid suction line
H Bung adapter
J Fluid drain valve (required)
K Fluid shutoff valve
L Fluid line
M Fluid inlet (Aluminum, FIG. 3, four ports, one not visible; Plastic, FIG. 4, center or end flanges available; Stainless Steel, not pictured, one port)
N Fluid outlet (Aluminum, FIG. 3, four ports, one not visible; Plastic, FIG. 4, center or end flanges available; Stainless Steel, not pictured, one port)
R Ground wire (required for aluminum, conductive polypropylene, and stainless steel pumps; see page 7 for installation instructions)

1.888.610.7664 www.calcert.com sales@calcert.com

Parts

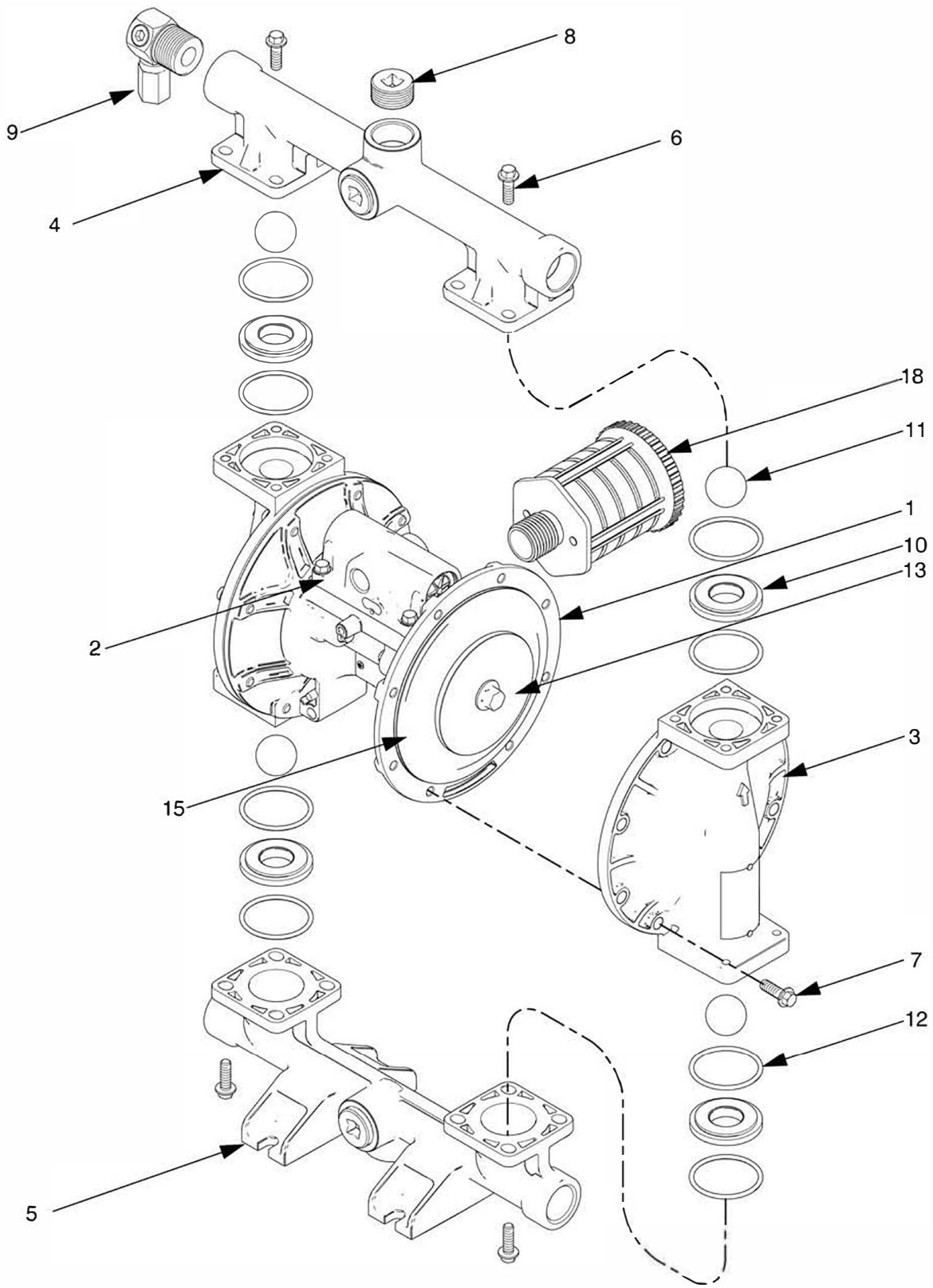

Parts/Kits Quick Reference

Use this table as a quick reference for parts/kits. See pages indicated in table for full description of kit contents.

Ref.	Part/Kit	Description	Qty.
1	Varies	Center Section; not sold separately	1
		Aluminum	
		Polypropylene	
2	Varies	Air Valve	1
3		Fluid Cover Kits	2
	24B653	Aluminum	
	24C051	Conductive Polypropylene	
	24C050	Polypropylene	
	24C061	Stainless Steel	
4		Outlet Manifold Kits	1
	24B649	Aluminum, npt	
	24B650	Aluminum, bspt	
	24C039	Conductive Poly, center flange	
	24C042	Conductive Poly, end flange	
	24C038	Polypropylene, center flange	
	24C041	Polypropylene, end flange	
	24C057	Stainless Steel, npt	
	24C058	Stainless Steel, bspt	
5		Inlet Manifold Kits	1
	24B651	Aluminum, npt	
	24B652	Aluminum, bspt	
	24C045	Conductive Poly, center flange	
	24C048	Conductive Poly, end flange	
	24C044	Polypropylene, center flange	
	24C047	Polypropylene, end flange	
	24C059	Stainless Steel, npt	
	24C060	Stainless Steel, bspt	
6		Manifold Fasteners; 8-pack	16
	24B654	Aluminum	
	24C056	Conductive Polypropylene	
	24C056	Polypropylene	
	24C064	Stainless Steel	
7		Fluid Cover Fasteners; 8-pack	16
	24B654	Aluminum	
	24C055	Conductive Polypropylene	
	24C055	Polypropylene	
	24C063	Stainless Steel, aluminum center	
	24C056	Stainless Steel, plastic center	
8	24C617	Plug; 6-pack, aluminum pumps only	6
9	24B910	Pressure Relief Valve; fuel dispense model only	1

Ref.	Part/Kit	Description	Qty.
10		Seats; 4-pack, includes 8 o-rings where needed	4
	24B630	Acetal	
	24B631	Aluminum	
	24B632	Buna-N	
	24B638	FKM Fluoroelastomer	
	24B633	Geolast	
	24B635	Polypropylene	
	24B636	Santoprene	
	24B637	Stainless Steel	
	24B634	TPE	
11		Check Balls; 4-pack, includes 8 o-rings	4
	24B639	Acetal	
	24B640	Buna-N	
	24B643	Neoprene	
	24B644	Neoprene with SST core	
	24B648	FKM Fluoroelastomer	
	24B641	Geolast	
	24B645	PTFE	
	24B646	Santoprene	
	24B647	Stainless Steel	
	24B642	TPE	
12	24B655	Manifold O-Ring; ptfe, 8-pack,	8
13		Fluid Side Diaphragm Plate; included in Air and Fluid Plate Kits	2
	24C035	Aluminum	
	24C036	Conductive Polypropylene	
	24C036	Polypropylene	
	24C062	Stainless Steel	
14	-----	Air Side Diaphragm Plate (not visible); included in Air and Fluid Plate Kits	2
15		Diaphragm Kits	2
	24B622	Buna-N Standard	
	24B629	FKM Fluoroelastomer Standard	
	24B623	Geolast Standard	
	24B628	Santoprene Standard	
	24B624	TPE Standard	
	24B625	Neoprene Overmolded	
	24B626	PTFE Overmolded	
	24B627	PTFE/EPDM Two-Piece	
18	112182	Muffler; 3/4 npt, plastic	1
19		Screw, ground, M5 x 0.8; not shown	1
	116343	Aluminum pumps, carbon steel	
	116344	Conductive Poly Pumps, stainless steel	
20▲	188621	Label, warning (not shown)	1

▲*Replacement Warning labels, signs, tags, and cards*

1.888.610.7664 www.calcert.com sales@calcert.com

REV0421

Parts List For

Calcium Chloride Pump

Model 10543

Calcium Chloride Pump

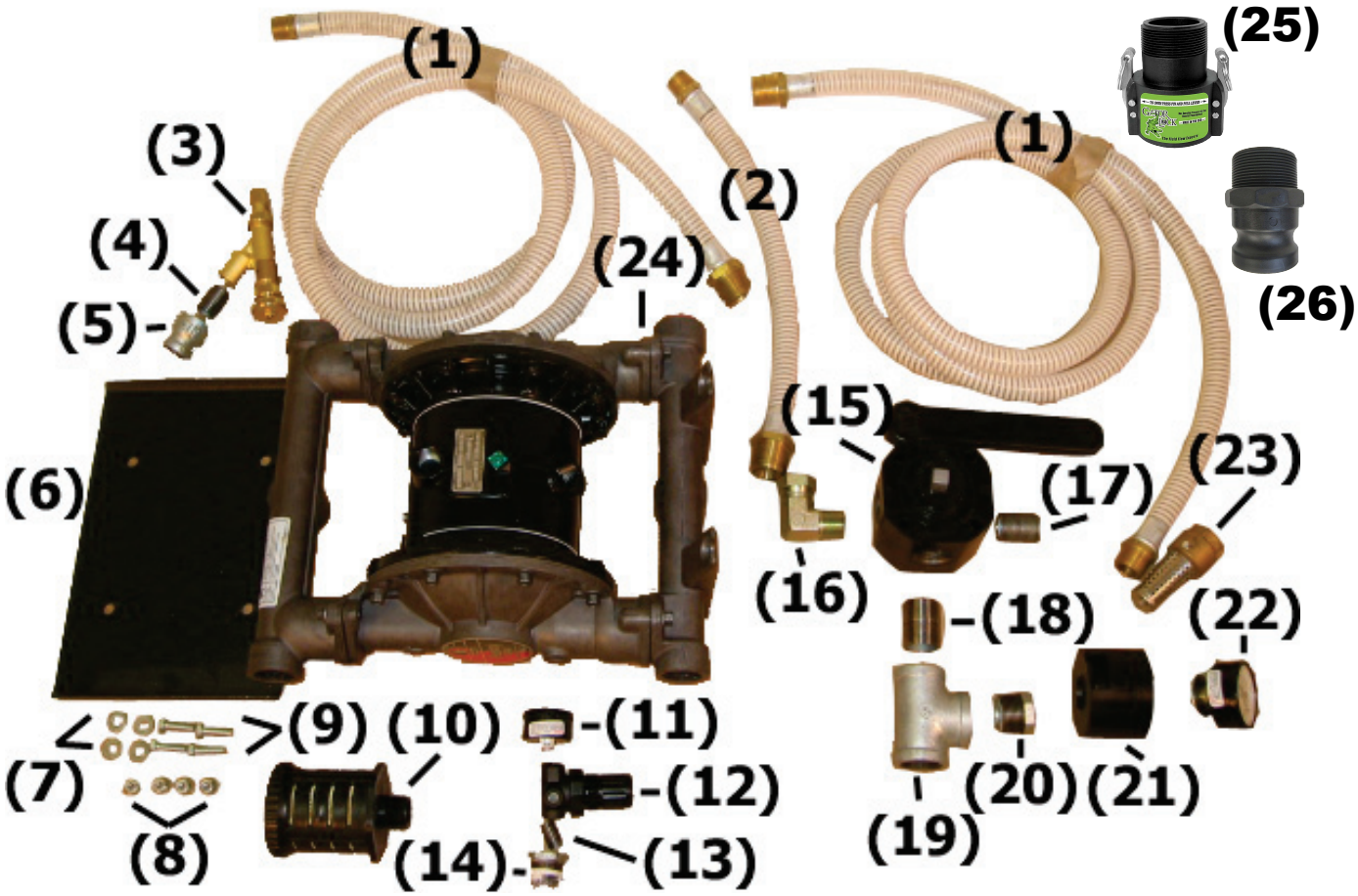

ITEM NO.	PART NO.	NO. REQ'D	DESCRIPTION	ITEM NO.	PART NO.	NO. REQ'D	DESCRIPTION
1	10537	2	Calcium Hose 10" x ¾" x 1"	13	10565	1	Nipple, ½" Close
2	10531	1	Calcium Hose 17" OAL x ¾" x 1"	14	10569	1	Bushing, ½" x ¼"
3	10522	1	Calcium Ejector Gun	15	10515	1	4 Way Valve w/ Handle
4	10570	1	Nipple, ½" Close	16	10536	1	Fitting, Brass w/ Swivel
5	10571	1	Reducer, ¾" x ½"	17	10567	1	Nipple, ¾" Close
6	10561	1	Plate, Base	18	10579	1	Nipple, 1" Close
7	10575	4	Washer, ¼"	19	10564	1	Tee, 1"
8	10573	4	Nut, ¼ - 20	20	10568	1	Bushing, 1" x ¼"
9	10574	4	Cap Screw, ¼" x 3 ½"	21	SB-GP	1	Gauge Protector
10	10554	1	Muffler	22	10521	1	¼" Vacuum Pressure Gauge
11	10520	1	1/8" Air Gauge	23	10535	1	Suction Strainer
12	10523	1	Regulator	24	10540P	1	Pump
				25	10543-LCF	2	Female, Locking Coupler
				26	10543-LCM	2	Male, Locking Coupler

Hydro Inflation Chart

NOTES:

1. Tables are based on using type 1 calcium chloride (77% CaCl2). If type 2 concentrated calcium chloride (94% CaCl2) is used, reduce specified "Lbs. CaCl2" in tables by 25%.
2. Values shown in tables are approximate and represent 75% fill or "valve level" fill (with valve at top of tire) which is recommended practice.
3. Antifreeze protection levels are shown at top of each table for different solutions.
4. For rear tires mounted on narrower rims, decrease quantities at the rate of 4% for each 1-inch reduction in rim width. For wider rims, increase quantities by 4% for each 1-inch increase in rim width.

Tire Size	Rim Width	WATER		31/2 LB. SOLUTION			5 LB. SOLUTION		
		Solid at +32°F.		Slush-free to -12°F. Solid at -52°F.			Slush-free to -53°F. Solid at -62°F.		
		Water Gal.	Weight Lbs.	Water Gal.	CaCl2 Lbs.	Total Wt.	Water Gal.	CaCl2 Lbs.	Total Wt.
DRIVE WHEEL TIRES									
8.3-20	7.00	10	82	8	38	100	8	40	107
8.3-22	7.00	9	76	7	35	92	7	37	98
8.3-24	7.00	13	108	11	39	131	10	50	133
9.5-16	8.00	12	100	10	35	118	10	50	133
9.5-18	8.00	12	99	9	45	121	10	48	128
9.5-20	8.00	13	110	10	50	134	11	54	143
9.5-22	8.00	15	123	11	56	150	12	60	159
9.5-24	8.00	17	142	15	53	178	14	70	187
9.5-32	8.00	22	183	19	67	225	18	90	240
9.5-36	8.00	25	208	22	77	260	20	100	267
9.5-42	8.00	29	242	25	88	296	23	115	307
11.2-24, 11.2R24	10.00	24	200	20	70	237	19	95	253
11.2-28, 11.2R28	10.00	27	225	24	84	284	22	110	293
11.2-36	10.00	35	292	30	105	355	28	140	374
11.2-38	10.00	36	300	31	109	368	29	145	387
12.4-24, 12.4R24	11.00	30	250	26	91	308	25	125	333
12.4-28, 12.4R28	11.00	35	292	30	105	355	28	140	374
12.4-36	11.00	44	367	38	133	450	36	180	480
12.4-38	11.00	46	384	40	140	474	37	185	494
12.4-42	11.00	51	425	44	154	521	41	205	547
12.4-46, 12.4R46	12.00	53	442	45	158	533	43	215	573
12.4-54, 12.4R54	10.00	58	484	49	172	581	47	235	627
13.6-24, 13.6R24	12.00	38	317	32	112	379	30	150	400
13.6-26	12.00	40	334	35	123	415	33	165	440
13.6-28, 13.6R28	12.00	43	359	37	130	439	35	175	467
13.6-36, 13.6R36	12.00	50	420	38	192	511	41	204	543

Tire Size	Rim Width	WATER		31/2 LB. SOLUTION			5 LB. SOLUTION		
		Solid at +32°F.		Slush-free to -12°F. Solid at -52°F.			Slush-free to -53°F. Solid at -62°F.		
		Water Gal.	Weight Lbs.	Water Gal.	CaCl2 Lbs.	Total Wt.	Water Gal.	CaCl2 Lbs.	Total Wt.
DRIVE WHEEL TIRES									
13.6-38, 13.6R38	12.00	57	475	49	172	581	46	230	614
13.6-46	12.00	65	542	55	193	651	52	260	694
212/80D15	7.00	8	69	6	31	84	7	33	89
315/75D15	10.00	20	164	15	75	200	16	80	212
355/80D20	11.00	35	288	26	132	351	28	140	373
475/64D20	15.00	52	432	39	197	525	42	209	559
13.9-36	12.00	51	425	44	154	521	42	210	560
14.9-24	13.00	47	392	40	140	474	38	190	507
14.9-26, 14.9R26	12.00	48	400	41	144	486	39	195	520
14.9-28, 14.9R28	13.00	53	442	46	161	545	43	215	574
14.9-30, 14.9R30	13.00	57	475	48	168	568	46	230	614
14.9-34, 14.9R34	13.00	63	525	54	189	639	51	255	680
14.9-38	12.00	67	559	58	203	687	55	275	734
14.9-46, 14.9R46	12.00	80	667	68	238	805	65	325	867
15.5-38, 15.5R38	14.00	66	550	56	196	663	53	265	707
16.9-24, 16.9R24	15.00	61	509	52	182	616	49	245	654
16.9-26, 16.9R26	15.00	65	542	56	196	663	52	260	694
16.9-28, 16.9R28	15.00	69	575	59	207	699	56	280	747
16.9-30, 16.9R30	15.00	73	609	63	221	746	59	295	787
16.9-34	15.00	82	684	70	245	829	66	330	880
16.9-38, 16.9R38	15.00	90	751	77	270	912	73	365	974
17.5L-24	15.00	55	459	47	165	557	45	225	600
18.4-16.1	16.00	49	409	42	147	497	39	195	520

1.888.610.7664 www.calcert.com sales@calcert.com

Operating Temperature Range

NOTICE

Temperature limits are based on mechanical stress only. Certain chemicals will further limit the maximum operating temperature range. Stay within the temperature range of the most-restricted wetted component. Operating at a temperature that is too high or too low for the components of your pump may cause equipment damage.

	Operating Temperature Range			
	Aluminum or Stainless Steel Pumps		Polypropylene or Conductive Polypropylene Pumps	
Diaphragm/Ball/Seat Material	**Fahrenheit**	**Celsius**	**Fahrenheit**	**Celsius**
Acetal (AC)	10° to 180°F	-12° to 82°C	32° to 180°F	0° to 82°C
Buna-N (BN)	10° to 180°F	-12° to 82°C	32° to 180°F	0° to 82°C
FKM Fluoroelastomer (FK)*	-40° to 275°F	-40° to 135°C	32° to 180°F	0° to 82°C
Geolast® (GE)	-40° to 150°F	-40° to 66°C	32° to 150°F	0° to 66°C
Neoprene overmolded diaphragm (CO) or Neoprene check balls (CR or CW)	0° to 180°F	-18° to 82°C	32° to 180°F	0° to 82°C
Polypropylene (PP)	32° to 180°F	0° to 82°C	32° to 180°F	0° to 82°C
PTFE overmolded diaphragm (PO)	40° to 180°F	4.0° to 82°C	40° to 180°F	4° to 82°C
PTFE check balls or two-piece PTFE/EPDM diaphragm (PT)	40° to 220°F	4° to 104°C	40° to 180°F	4° to 82°C
PVDF (PV)	10° to 225°F	-12° to 107°C	32° to 180°F	0° to 82°C
Santoprene® (SP)	-40° to 180°F	-40° to 82°C	32° to 180°F	0° to 82°C
TPE (TP)	-20° to 150°F	-29° to 66°C	32° to 150°F	0° to 66°C

** The maximum temperature listed is based on the ATEX standard for T4 temperature classification. If you are operating in a non-explosive environment, FKM fluoroelastomer's maximum operating temperature in aluminum or stainless steel pumps is 320°F (160°C).*

1.888.610.7664 www.calcert.com sales@calcert.com

Technical Data

Maximum fluid working pressure	125 psi (0.86 MPa, 8.6 bar)
Air pressure operating range	20-125 psi (0.14-0.86 MPa, 1.4-8.6 bar)
Maximum air consumption	67 scfm
Air consumption at 70 psi (0.48 MPa, 4.8 bar), 20 gpm (76 lpm)	25 scfm
Maximum free-flow delivery	50 gpm (189 lpm)
Maximum pump speed	280 cpm
Fluid displacement per cycle	0.17 gal. (0.64 liters)
Maximum suction lift	16 ft (4.9 m) dry, 29 ft (8.8 m) wet
Maximum size pumpable solids	1/8 in. (3.2 mm)
Sound Power*	
at 70 psi (0.48 MPa, 4.8 bar) and 50 cpm	78 dBa
at 100 psi (0.7 MPa, 7.0 bar) and full flow	90 dBa
Sound Pressure**	
at 70 psi (0.48 MPa, 4.8 bar) and 50 cpm	84 dBa
at 100 psi (0.7 MPa, 7.0 bar) and full flow	96 dBa
Operating temperature range	see page 23
Air inlet size	1/2 npt(f)
Fluid inlet size	
Aluminum (1050A)	1 in. npt(f) or 1 in. bspt
Fluid outlet size	
Aluminum (1050A)	1 in. npt(f) or 1 in. bspt
Weight	
Aluminum (1050A)	23 lb. (10.5 kg)
Wetted parts	
Aluminum (1050A)	aluminum and material(s) chosen for seat, ball, and diaphragm options
Non-wetted external parts	
Aluminum (1050A)	aluminum, coated carbon steel

** Sound power measured per ISO-9614-2.*
*** Sound pressure was tested 3.28 ft (1 m) from equipment.*

All trademarks mentioned in this manual are the property of their respective owners.

1.888.610.7664 www.calcert.com sales@calcert.com