testo 190 data logger

0572 1900, 0572 1901, 0572 1902, 0572 1903, 0572 1904

Instruction manual

1.888.610.7664 www.calcert.com sales@calcert.com

Contents

1 Safety and disposal 5
1.1 About this document 5
1.2 Security 5
1.3 Warning notices 7
1.4 Symbols 7
1.5 Transport 8
1.6 Disposal 8
2 Description of the instrument 9
2.1 Use 9
2.2 testo 190 data logger variants 10
2.3 testo 190 data logger overview 10
2.4 Power supply 11
2.5 Programming and readout unit 11
2.6 testo 190 CFR software 12
3 Commissioning 13
3.1.1 Installing the battery 13
3.2 Positioning the distance adapter in the programming and readout unit 15
3.3 Positioning the data logger in the programming and readout unit 15
3.4 Connecting the programming and readout unit to the PC via USB 16
4 Operation 18
4.1 Bending flexible probe shafts 18
4.2 Winding up probe shafts using a winding aid 19
4.3 Fitting a kink protector 19
4.4 Changing the battery 21
4.5 Installing the freeze-drying probe holder 22
4.6 Mounting the retaining clamp 22
5 Maintenance 24
5.1 Cleaning the instrument 24
5.2 Calibration 24
6 Technical data 25
6.1 testo 190-T1 25
6.2 testo 190-T2 25
6.3 testo 190-T3 26
6.4 testo 190-T4 27
6.5 testo 190-P1 28
6.6 Small case with readout unit 29
6.7 Battery 29

1.888.610.7664 www.calcert.com sales@calcert.com

6.8 Accessories and spare parts..... 30

1 Safety and disposal

1.1 About this document

- The instruction manual is an integral part of the instrument.
- Keep this documentation at hand so that you can refer to it when necessary.
- Always use the complete original instruction manual.
- Please read this instruction manual through carefully and familiarize yourself with the product before putting it to use.
- Hand this instruction manual on to any subsequent users of the product.
- Pay particular attention to the safety instructions and warning advice in order to prevent injury and damage to the product.

1.2 Security

General safety instructions

- Only operate the product properly, for its intended purpose, and within the parameters specified in the technical data.
- Do not apply any force.
- Do not operate the instrument if there are signs of damage to the housing or connected cables.
- Dangers may also arise from objects to be measured or the measuring environment. Always comply with the locally valid safety regulations when carrying out measurements.
- Do not store the product together with solvents.
- Do not use any desiccants.
- Only perform maintenance and repair work on this instrument that is described in this documentation. Follow the prescribed steps exactly when doing the work.
- The instrument is not explosion-proof and must not be used in potentially explosive atmospheres.
- Maintenance work that is not described in this documentation must only be carried out by trained service engineers.
- Use only original spare parts from Testo.
- External circuits may only be supplied with output voltages below the limits of 30 V RMS and 42.4 V peak or 60 V DC by a certified mains unit with reinforced or double insulation for protection against electric shock.

1.888.610.7664 www.calcert.com sales@calcert.com

Batteries

- Improper use of batteries may cause destruction of the batteries, injuries due to current surges, fire or the escape of chemicals.
- Only use the battery supplied in accordance with the instructions in the instruction manual.
- Do not charge batteries. Attempting to charge a non-rechargeable battery may cause gas to be produced or heat to be generated. That may lead to the escape of gases, an explosion and/or possibly to fire.
- Do not short batteries. If the positive (+) and negative (-) terminals of a battery are directly connected to one another, the battery will be shorted. For example, batteries can be shorted when you have them loose in your pocket along with keys or coins. This may lead to the escape of gases and the leakage of battery acid.
- Do not deform batteries. Batteries must not be squashed, drilled, dismantled, pierced, modified or damaged in any other way. This may lead to the leakage of battery acid, to the escape of gases and/or to an explosion.
- Do not heat batteries above the permitted temperature or burn them. If a battery is heated, this may lead to the leakage of battery acid and/or to an explosion. Lithium batteries can, for instance, react very strongly in combination with fire. This may involve battery components being emitted with considerable power.
- Do not consume battery, risk of burns due to hazardous substances. Keep new and used batteries away from children.
- In principle, contact with escaping battery components may present a risk to health and to the environment. Adequate body and breathing protection is therefore required when in contact with batteries that have peculiar aspects (escaping contents, deformations, discolourations, dents or the like).
- Do not leave batteries lying around loose once they have been unpacked. If batteries that have been unpacked are left lying around loose, they can easily short one another, particularly button cells. In some cases, this is very dangerous because the batteries may heat up. This may lead to an explosion.
- Always store batteries in a cool, dry place.
- Batteries must be disposed of in accordance with the local and country-specific regulations. In order to prevent short circuits and the associated heating, lithium batteries must never be stored unprotected in bulk. Appropriate measures against short circuits are for instance inserting the batteries into the original packaging or a plastic bag, masking the poles or embedding them in dry sand.
- Lithium batteries must be transported and shipped in accordance with the local and country-specific regulations.
- Do not expose the batteries to heavy impacts, water or fire.

1.888.610.7664 www.calcert.com sales@calcert.com

- Only use the batteries in environments with a maximum temperature of +140 °C.
- Do not store unused batteries in the proximity of metal objects.
- Do not use any damaged batteries.

First-aid measures

- If there is any contact with the skin or eyes, the areas must be rinsed with water for at least 15 minutes. If there is any contact with the eyes, a doctor must be contacted in addition to the rinsing.
- If burns are caused, these must be treated appropriately. You are also strongly advised to contact a doctor.
- Airways: Leave the room immediately when smoke development or gas release is acute. Consult a doctor when amounts are larger and airways are irritated.
- Swallowing: Rinse out mouth and surrounding area with water. Get medical assistance immediately.
- In the event of contact with battery acid: rinse the affected areas thoroughly with water and if necessary consult a doctor.

1.3 Warning notices

Always pay attention to any information denoted by the following warnings. Implement the precautionary measures specified!

⚠ DANGER

Risk of death!

⚠ WARNING

Indicates possible serious injury.

⚠ CAUTION

Indicates possible minor injury.

ATTENTION

Indicates possible damage to equipment.

1.4 Symbols

Display	Explanation
ℹ	Note: basic or further information

1.888.610.7664 www.calcert.com sales@calcert.com

Display	Explanation
1 **2** …	Action: several steps, the sequence must be followed
>	Action: one step or optional step
▸	Result of an action
✓	Requirement
Menu	Elements of the program interface
[OK]	Buttons of the program interface
... | ...	Functions/paths within a menu
"..."	Example entries

1.5 Transport

- Always transport and store the data loggers and accessories in the Testo cases.

1.6 Disposal

- Dispose of faulty and/or spent batteries in accordance with the valid legal specifications.
- At the end of its useful life, deliver the product to the separate collection point for electric and electronic devices (observe local regulations) or return the product to Testo for disposal.

  WEEE Reg. No. DE 75334352

1.888.610.7664 www.calcert.com sales@calcert.com

2 Description of the instrument

2.1 Use

Testo guarantees the functionality of its products when used in accordance with their intended purpose. This guarantee does not apply to features of Testo products in combination with unauthorized third-party products. Competitor products are not authorized by Testo.
As is common practice, Testo generally excludes support, warranty or guarantee claims relating to functionality that has not been guaranteed by Testo as part of the product offered. Claims of this kind shall also be excluded in the event of improper use or handling of the products, e.g. in combination with unauthorized third-party products.

The testo 190 data loggers are used to measure individual temperature and pressure readings and measurement series.

The testo 190 data loggers measure and store temperature and pressure readings which, with the aid of the programming and readout unit and a USB cable, are transmitted to the PC, where they can be read out and evaluated using the testo 190 CFR software. The software enables the data loggers to be individually programmed and the readings analyzed and printed out via a report and subsequently archived.

Application examples

The testo 190-T1, testo 190-T2, testo 190-T3, testo 190-T4 and testo 190-P1 data loggers are ideal for measuring temperature and pressure in order to validate sterilization processes in autoclaves, containers and freeze-drying systems.

In conjunction with the freeze-drying probe holder, the testo 190-T3 and testo 190-T4 data loggers are also ideal for measuring the plate surface temperature distribution in freeze-drying systems.

All testo 190 data loggers can also be used for various control measurements of temperature and pressure within the defined temperature range.

1.888.610.7664 www.calcert.com sales@calcert.com

2.2 testo 190 data logger variants

1	testo 190-T1	**2**	testo 190-T2
3	testo 190-T3	**4**	testo 190-T4
5	testo 190-P1		

2.3 testo 190 data logger overview

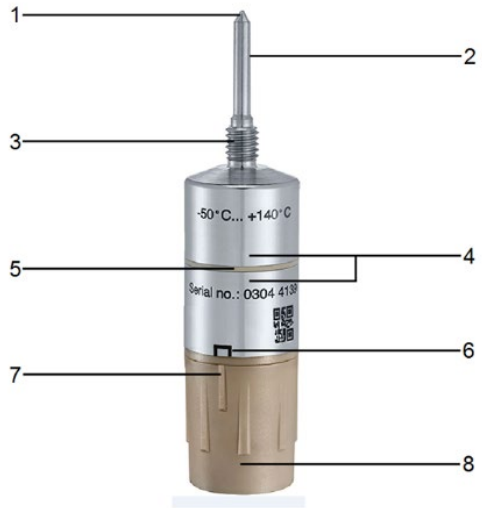

1	Probe shaft tip	**2**	Probe shaft
3	Thread	**4**	Programming and readout contacts
5	Isolator ring	**6**	Position marking
7	Rib	**8**	Battery

⚠: Observe the enclosed safety instructions, see Section 1, **Safety and disposal**.

1.888.610.7664 www.calcert.com sales@calcert.com

The testo 190-T4 and testo 190-P1 data loggers have no thread. For the probe shaft dimensions of the testo 190 data loggers, please refer to the technical data in Section 6, **Technical data**.

2.4 Power supply

For information on installing and changing the batteries, please refer to Section 3.1 **Installing the battery** and 4.2 **Changing the battery**. Section 6 contains the **Technical data** for the batteries.

1	Battery (1/2 AA)

2.5 Programming and readout unit

Communication between the testo 190 data loggers and the testo 190 CFR software occurs exclusively via the programming and readout unit. See Section 3.3, **Positioning the data logger in the programming and readout unit**.

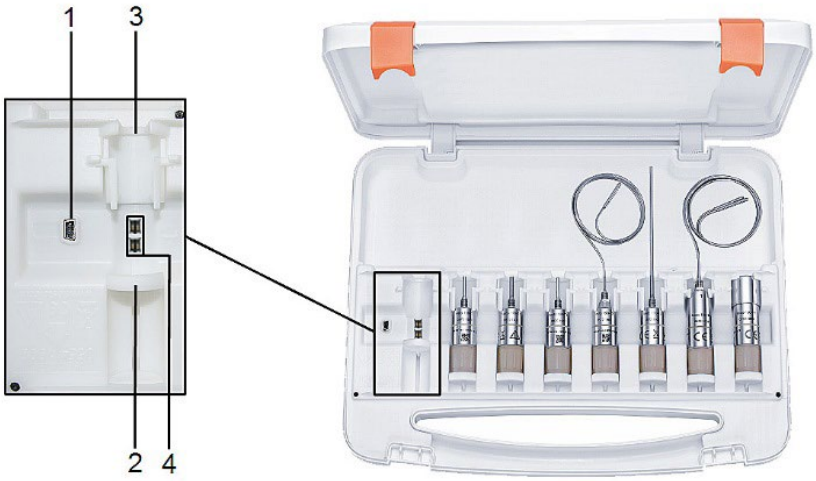

	Element		Element
1	Mini USB (mini B) port	**2**	Sliding bracket

1.888.610.7664 www.calcert.com sales@calcert.com

3	Distance adapter	**4**	Communication contacts

The programming and readout unit is installed in the case. The data loggers can also be transported in this.

2.6 testo 190 CFR software

The testo 190 CFR software can be used to program the testo 190 data loggers via the programming and readout unit (e.g. measuring cycle, measurement start, measurement stop, etc.) and to read them. It also offers calculation and analysis options for the measurement data acquired. The separate testo 190 CFR software instruction manual (order no. 0970 1901) is available for this.

1.888.610.7664 www.calcert.com sales@calcert.com

3 Commissioning

3.1.1 Installing the battery

The testo 190 data loggers are supplied with a battery as standard. The data logger can therefore be used in the temperature range from -50 °C to +140 °C.

⚠ WARNING

Danger of explosion!
Ambient temperature too hot!

- Do not place the batteries in an environment hotter than 140 °C.
- Do not expose the batteries to any microwave radiation.

✓ An undamaged seal ring must be inserted in the groove provided and another seal ring must be fitted below the thread.

ATTENTION

Loggers that have already been used in an autoclave must not subsequently be used with the batteries used in a freeze-drying application.
Before a logger from autoclave use (or similar application) is integrated into a freeze-drying process, it must be fitted with a new battery (or used battery that has never been used in the autoclave).

1 Place battery on data logger and press lightly.

1.888.610.7664 www.calcert.com sales@calcert.com

2 Tighten battery by turning clockwise.

Avoid the use of force! Hand-tighten the battery.

- The marker on the battery must be located inside the position marking.
- The O-ring between the metal housing and the battery must no longer be visible.

ATTENTION

Inserting the battery incorrectly will cause damage!
Ingress of moisture!

- The rib must be positioned inside the position marking on the data logger.

1.888.610.7664 www.calcert.com sales@calcert.com

The service life of the batteries depends very much on the conditions in the area of use. Under typical autoclave and freeze-drying conditions (measuring cycle 10 s and service life 2 h/d), we recommend replacing battery 0515 1901 after one year at the latest. Increased measuring cycles or reduced measuring rates may result in a shorter service life.

Therefore, please pay attention to the battery level indicator in the PC software.

3.2 Positioning the distance adapter in the programming and readout unit

The data loggers are supplied with the appropriate distance adapters. The testo 190-P1 data logger does not have a distance adapter and can be placed in the programming and readout unit without using one.

1 Insert the distance adapter into the socket first.

2 Push forward until the side brackets engage easily.

3.3 Positioning the data logger in the programming and readout unit

The testo 190 data loggers are supplied with the appropriate distance adapter for the programming and readout unit. A battery must be connected to the data logger for positioning in the station.

✓ Battery is connected.

1 Insert appropriate distance adapter into the socket.

2 Insert data logger onto sliding bracket.

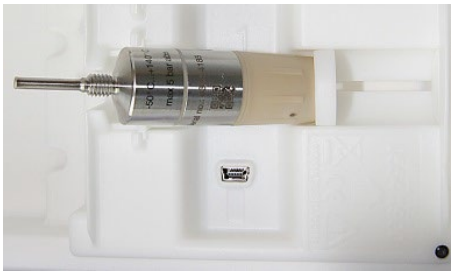

1.888.610.7664 www.calcert.com sales@calcert.com

3 Push the data logger in the direction of the arrow and click it into place in the distance adapter.

▸ The data logger is properly inserted if the isolator ring is between the two communication contacts.

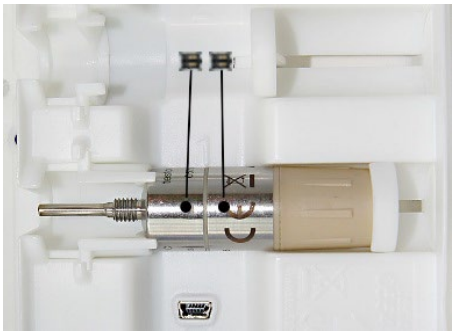

ATTENTION

The sliding bracket may break off if the pressure is too great!

- Use light pressure to insert the data logger in the socket.

ATTENTION

Strong lateral pressure may cause the communication contacts on the bottom of the socket to break off!

- First place the data logger on the sliding bracket and deposit it gently onto the contacts.

3.4 Connecting the programming and readout unit to the PC via USB

Please ensure that the case is securely positioned so that the case lid cannot fall onto the cable.

✓ The computer is started up and the **testo 190 CFR software** is enabled.

✓ The battery is connected to the data logger and is functional.

✓ Data logger is placed on a socket of the programming and readout unit.

1 Insert the mini USB (mini B) plug into the programming and readout unit and connect to the computer.

1.888.610.7664 www.calcert.com sales@calcert.com

- The software establishes a connection to the programming and readout unit.
- Successful connection to the programming and readout unit is indicated in green.

If the connection is shown in black, check that the programming and readout unit is properly connected to your PC. In addition, please check whether the isolator ring of the data logger is between the contact pins, see **Positioning the data logger in the programming and readout unit.**

- The data loggers can be programmed for the measurements using the testo 190 CFR software.

1.888.610.7664 www.calcert.com sales@calcert.com

4 Operation

4.1 Bending flexible probe shafts

The testo 190-T3 and testo 190-T4 data loggers have flexible probe shafts. The testo 190-T1 and testo 190-T2 data loggers are equipped with rigid probe shafts, which must not be bent.

ATTENTION

Incorrect bending of the probe shafts!
Material fatigue and probe breakage!

- Begin bending the probe shafts only from a distance of 30 mm from the housing material and 50 mm from the probe tip. Otherwise, the mechanical stress caused by the housing and probe tip edge would be too great.
- Do not use a clamp or any other tools to bend the probe shafts.
- The probe shaft of the data logger must not fall below the bending radius of 50 mm. Small bending radii or rapid bending back and forth result in material fatigue and premature probe breakage.

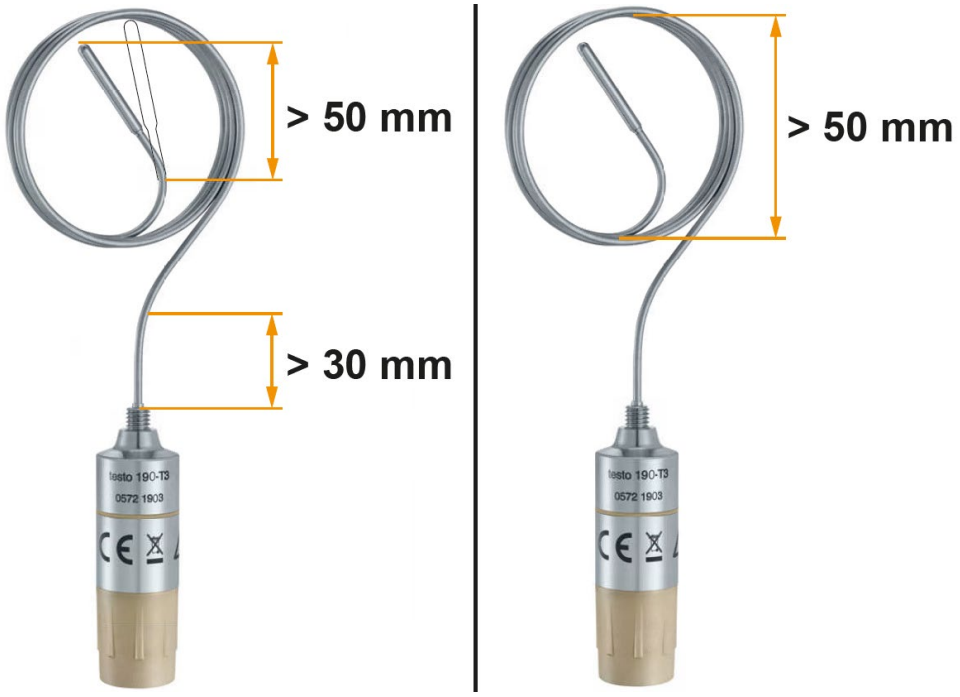

1.888.610.7664 www.calcert.com sales@calcert.com

4.2 Winding up probe shafts using a winding aid

The use of a winding aid makes it easier to correctly wind up the flexible probe shafts of the testo 190-T3 and testo 190-T4 data loggers and enables compact and material-friendly storage.

Apart from the plastic winding aid, no other tools are required.

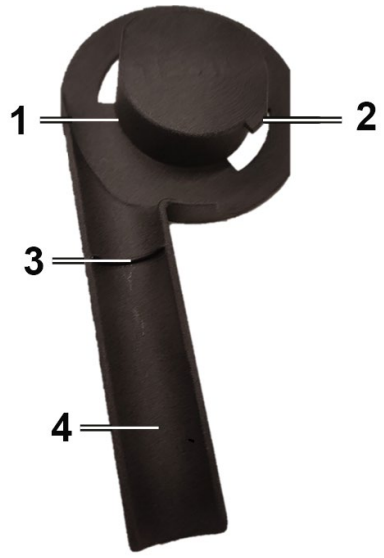

1	Winding mandrel	**3**	Stop
2	Plastic nose	**4**	Handle

1. Grasp the winding aid with one hand and slide the data logger with the probe shaft towards the winding mandrel (1) into the notch provided until it stops (3)
2. With the other hand, guide the probe shaft(s) tightly around the winding mandrel while pulling gently until the probe shaft(s) are fully wound.

▸ At the end of the winding process, the probe shaft will spring up slightly, making it easy to remove the wound part from the winding mandrel.

4.3 Fitting a kink protector

To prevent unauthorized/unintentional bending and winding of the flexible probe shafts of the testo 190-T3 and testo 190-T4 data loggers at the welding point, a kink protector can be retrofitted.

The kink protector consists of a plastic clip and a stainless steel kink protector.

1.888.610.7664 www.calcert.com sales@calcert.com

ATTENTION

With the kink protection installed, only immerse the sensor tube in food. The kink protection must not come into direct contact with food.

1	Plastic clip	**2**	Stainless steel kink protector

1 Fit the plastic clip (1) onto the shaft and gently push it as far as it will go.

2 Thread the stainless steel kink protector (2) with straight opening onto the probe and also push it over the plastic clip as far as it will go.

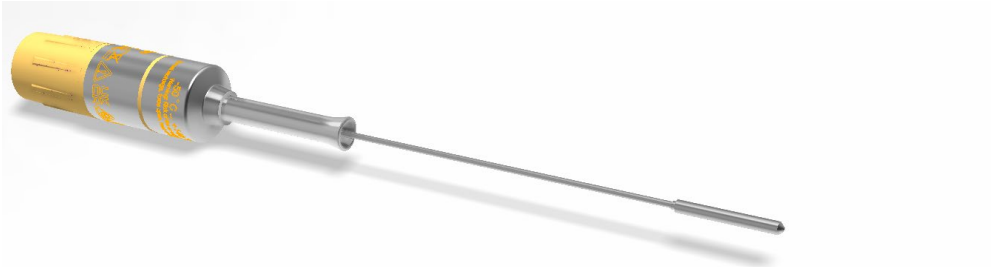

ATTENTION

Contaminated bend protection must be dismantled (follow the bend protection assembly in reverse order), cleaned and reassembled.

1.888.610.7664 www.calcert.com sales@calcert.com

4.4 Changing the battery

Before use, check that the battery is suitable for the operating temperature range.

1 Unscrew the battery from the data logger by turning to the left.

2 Remove battery from the data logger.

After removal of the battery, the data logger loses the information on battery capacity.

Stored data is retained when the battery is replaced or if the battery fails.

3 Remove any dirt from the data logger and the contact pins.

4 Connect new battery, see Section 3.1, **Installing the battery**.

The battery replacement must be confirmed in the testo 190 Software CFR. This can be done under the menu item **Programming of loggers**.

1.888.610.7664 www.calcert.com sales@calcert.com

4.5 Installing the freeze-drying probe holder

The freeze-drying probe holder can only be used in conjunction with the testo 190-T3 and testo 190-T4 data loggers.

ATTENTION

Damage to the instrument due to improper use!

- The freeze-drying probe holder can only be used in a freeze-drying system.

1. Insert the probe shaft tip of the data logger into the slot.

2. Place the puck with the probe tip at the point to be measured on the temperature plate.

3. Bend the probe shaft so that the freeze-drying probe holder is in full contact with the plate.

The data logger must be positioned in such a way that the freeze-drying probe holder cannot slip.

4.6 Mounting the retaining clamp

The testo 190-T1, testo 190-T2 and testo 190-T3 data loggers have a thread on the probe shaft, which is intended for attaching the retaining clamp. The data logger can therefore be attached in systems or loading baskets without the use of adhesive tape. The retaining clamp can be used multiple times.

1.888.610.7664 www.calcert.com sales@calcert.com

1. With the thread in front, push the retaining clamp over the probe shaft.
2. Screw the retaining clamp clockwise onto the thread on the data logger.

3. A fixing material (cable tie, wire, etc.) can be fed through the opening of the retaining clamp.

4. Secure the data logger to an object (e.g. metal grid).

No additional tools are required to attach the retaining clamp. Materials such as cable ties or wires are not included in the delivery.

1.888.610.7664 www.calcert.com sales@calcert.com

5 Maintenance

5.1 Cleaning the instrument

- If the housing of the instrument is dirty, clean it with a damp cloth or a brush.
- Do not use any aggressive cleaning agents or solvents! Mild household cleaning agents and soap suds may be used.

5.2 Calibration

The testo 190 temperature and pressure data loggers feature a high level of accuracy. In order to maintain this accuracy in the measurement results over a long service life, Testo recommends calibrating instruments once a year. This service can be carried out by Testo Industrial Services GmbH. If calibration is carried out by an external service provider, please note the following:

Temperature data loggers:

The testo 190 T1, testo 190 T2, testo 190 T3 and testo 190 T4 instruments must be completely immersed in a liquid bath during calibration, i.e. the probe, body and battery. A silicon oil is recommended that is suitable for the temperature image being calibrated.

Pressure data loggers:

The testo 190 P1 pressure data logger must be completely positioned in a pressure chamber or pressurised container during calibration, i.e. the probe, body and battery. For example, a cylindrical vessel can be used as a chamber or vessel for absolute pressure calibration.

To prepare the data logger for calibration, the data logger must be programmed using the testo 190 CFR software and read out after calibration measurement has been performed. Please follow the instructions in section 4.5.3 Programming the data logger and section 4.5.4 Reading the data logger of the testo 190 CFR software instruction manual.

If you have any questions about other services related to calibration, validation and qualification, please contact Testo Industrial Services GmbH. Give Testo Industrial Services GmbH a call.

1.888.610.7664 www.calcert.com sales@calcert.com

6 Technical data

6.1 testo 190-T1

Feature	Value
Order no.	0572 1901
Measurement parameter	Temperature (°C/°F/K)
Probe type	PT1000
Measuring range	-50 °C to +140 °C
Accuracy	0.1 °C (-40 °C to +140 °C) 0.2 °C (-50 °C to -40 °C)
Resolution	0.01 °C
Operating temperature/operating pressure	-50 °C to +140 °C, 1 mbar to 4 bar
Storage temperature	-20 °C to +50 °C
Battery type	See Battery
Battery life	See Battery
Dimensions without probe shaft with battery (D x H)	Ø 20 mm x 59 mm
Probe shaft dimensions (D x H)	Ø 3 mm x 25 mm
Weight	47 g
Housing material	Stainless steel 316L/WNR. 1.4404/SUS 316L
Protection class	IP68
Measuring cycle	1 s to 24 h
Measurement data memory	60,000 readings
Time accuracy	± 5 s in 12 h
Response time t-63 %	4 s
Response time t-90 %	7 s
Guideline	2014/30/EU (EMC) 2011/65/EU (RoHS)
EU declaration of conformity	You can find the EU declaration of conformity on the Testo website.

6.2 testo 190-T2

Feature	Value
Order no.	0572 1902
Measurement parameter	Temperature (°C/°F/K)
Probe type	PT1000

1.888.610.7664 www.calcert.com sales@calcert.com

Feature	Value
Measuring range	-50 °C to +140 °C
Accuracy	0.1 °C (-40 °C to +140 °C) 0.2 °C (-50 °C to -40 °C)
Resolution	0.01 °C
Operating temperature/operating pressure	-50 °C to +140 °C, 1 mbar to 4 bar
Storage temperature	-20 °C to +50 °C
Battery type	See Battery
Battery life	See Battery
Dimensions without probe shaft with battery (D x H)	Ø 20 mm x 59 mm
Probe shaft dimensions (D x H)	Ø 3 mm x 115 mm
Weight	48 g
Housing material	Stainless steel 316L/WNR. 1.4404/SUS 316L
Protection class	IP68
Measuring cycle	1 s to 24 h
Measurement data memory	60,000 readings
Time accuracy	± 5 s in 12 h
Response time t-63 %	3 s
Response time t-90 %	6 s
Guideline	2014/30/EU (EMC) 2011/65/EU (RoHS)
EU declaration of conformity	You can find the EU declaration of conformity on the Testo.

6.3 testo 190-T3

Feature	Value
Order no.	0572 1903
Measurement parameter	Temperature (°C/°F/K)
Probe type	PT1000
Measuring range	-50 °C to +140 °C
Accuracy	0.1 °C (-40 °C to +140 °C) 0.2 °C (-50 °C to -40 °C)
Resolution	0.01 °C
Operating temperature/operating pressure	-50 °C to +140 °C, 1 mbar to 4 bar
Storage temperature	-20 °C to +50 °C

1.888.610.7664 www.calcert.com sales@calcert.com

Feature	Value
Battery type	See Battery
Battery life	See Battery
Dimensions without probe shaft with battery (D x H)	Ø 20 mm x 63 mm
Probe shaft dimensions (D x H)	Ø 1.5 mm x 775 mm
Weight	61 g
Housing material	Stainless steel 316L/WNR. 1.4404/SUS 316L
Protection class	IP68
Measuring cycle	1 s to 24 h
Measurement data memory	60,000 readings
Time accuracy	± 5 s in 12 h
Response time t-63 %	3 s
Response time t-90 %	6 s
Guideline	2014/30/EU (EMC) 2011/65/EU (RoHS)
EU declaration of conformity	You can find the EU declaration of conformity on the Testo website.

6.4 testo 190-T4

Feature	Value
Article no.	0572 1904
Measurement parameter	Temperature (°C/°F/K)
Probe type	2 x PT1000
Measuring range	-50 °C to +140 °C
Accuracy	0.1 °C (-40 °C to +140 °C) 0.2 °C (-50 °C to -40 °C)
Resolution	0.01 °C
Operating temperature/operating pressure	-50 °C to +140 °C, 1 mbar to 4 bar
Storage temperature	-20 °C to +50 °C
Battery type	See Battery
Battery life	See Battery
Dimensions without probe shaft with battery (D x H)	Ø 20 mm x 72 mm
Probe shaft dimensions (D x H)	Ø 1.5 mm x 775 mm
Probe shaft tip dimensions (D x H)	Ø 3 mm x 25 mm

1.888.610.7664 www.calcert.com sales@calcert.com

Feature	Value
Weight	92 g
Housing material	Stainless steel 316L/WNR. 1.4404/SUS 316L
Protection class	IP68
Measuring cycle	1 s to 24 h
Measurement data memory	30,000 readings per channel
Time accuracy	± 5 s in 12 h
Response time t-63 %	3 s
Response time t-90 %	6 s
Guideline	2014/30/EU (EMC) 2011/65/EU (RoHS)
EU declaration of conformity	You can find the EU declaration of conformity on the Testo website.

6.5 testo 190-P1

Feature	Value
Order no.	0572 1900
Measurement parameter	Pressure (mbar/bar/hPa/kPa/psi/kg/cm²/Torr)
Probe type	Piezoresistive sensor
Measuring range	1 mbar to 4 bar
Accuracy	± 20 mbar
Resolution	1 mbar
Operating temperature/operating pressure	0 °C to +140 °C, 1 mbar to 4 bar
Storage temperature	-20 °C to +50 °C
Battery type	See Battery
Battery life	See Battery
Dimensions without probe shaft with battery (D x H)	Ø 22 mm x 83 mm
Weight	91 g
Housing material	Stainless steel 316L/WNR. 1.4404/SUS 316L
Protection class	IP68
Measuring cycle	1 s to 24 h
Measurement data memory	60,000 readings
Time accuracy	± 5 s in 12 h
Response time t-63 %	0.2 s

1.888.610.7664 www.calcert.com sales@calcert.com

Feature	Value
Response time t-90 %	0.2 s
Guideline	2014/30/EU (EMC) 2011/65/EU (RoHS)
EU declaration of conformity	You can find the EU declaration of conformity on the Testo website.

6.6 Small case with readout unit

Feature	Value
Order no.	0516 1901
Material	ABS + ABS-GF17
Field of application	+10 °C to +40 °C
Storage temperature	-20 °C to +70 °C
Dimensions (length/width/height)	340 x 270 x 60 mm
Colour	White
Weight	1320 g
Voltage supply	via mini USB/PC
Available voltage	5 V
Programming/readout slots	8 slots

6.7 Battery

Feature	Value
Order no.	0515 1901
Housing material	PEEK
Output	3.6 V (800 mAh)
Battery type	1/2 AA lithium battery
Field of application	-50 °C to +140 °C, 1 mbar to 4 bar (abs.)
Storage temperature	-20 °C to +50 °C
Dimensions	Ø 20 mm; length 31.3 mm
Battery life (measuring cycle 10 seconds at 121 °C)	750 operating hours

1.888.610.7664 www.calcert.com sales@calcert.com

6.8 Accessories and spare parts

Description	Order no.
testo 190-T1, CFR temperature data logger including battery, long distance adapter for programming and readout unit and calibration protocol	0572 1901
testo 190-T2, CFR temperature data logger including battery, long distance adapter for programming and readout unit and calibration protocol	0572 1902
testo 190-T3, CFR temperature data logger including battery, long distance adapter for programming and readout unit and calibration protocol	0572 1903
testo 190-T4, CFR temperature data logger including battery, short distance adapter for programming and readout unit and calibration protocol	0572 1904
testo 190-P1, CFR pressure data logger including battery and calibration protocol	0572 1900
Battery	0515 1901
Case small	0516 1901
testo 190 CFR software	0554 1901
Retaining clamp (pack of 5)	0554 0297
Freeze-drying probe holder	0554 1907
Distance adapter short	0554 0298
Distance adapter long	0554 0299
Kink protection for testo 191-T3 and testo 191-T4	0554 0469
Winding aid for testo 191-T3 and testo 191-T4	0554 0470
ISO calibration certificate (temperature)	0520 0141
DAkkS calibration certificate (temperature)	0520 0281
ISO calibration certificate (pressure)	0520 0025
DAkkS calibration certificate (pressure)	0520 0215

For more information, please refer to the product catalogues and brochures or look on the internet.
For further accessories and spare parts, please refer to the product catalogues and brochures.

1.888.610.7664 www.calcert.com sales@calcert.com

Testo SE & Co. KGaA

0970 1900 en 11 - 07.2025

1.888.610.7664 www.calcert.com sales@calcert.com