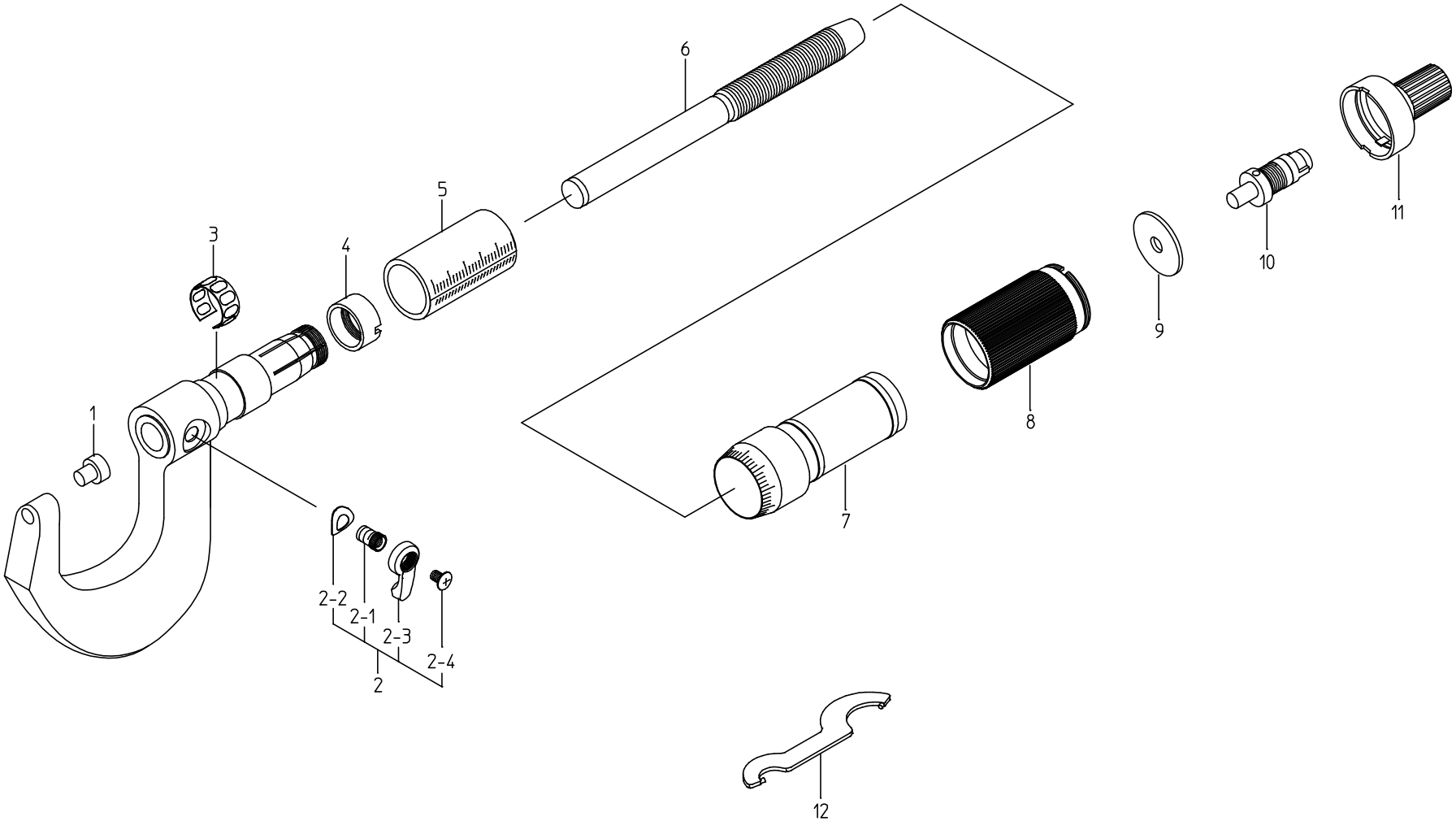
1
2
2-1
2-2
2-3
2-4
3
4
5
6
7
8
9
10
11
12

1.888.610.7664 www.calcert.com sales@calcert.com

ブヒンメイ	PART NAME	販売区分 CATEGORY	CODE NO. コードNO. 101-711 M217-1"	101-717 M227-1"		備考 COMMENTS
ｱﾝﾋﾞﾙ	ANVIL	Y	200355			
ｸﾗﾝﾌﾟ	CLAMP ASSY		04AZB005			
ｸﾗﾝﾌﾟﾈｼﾞ	CLAMP SCREW		200421			
ｽﾌﾟﾘﾝｸﾞﾜｯｼｬ	SPRING WASHER		200420			
ｸﾗﾝﾌﾟﾊﾝﾄﾞﾙ	CLAMP HANDLE		04AAB209			
ﾄﾒﾈｼﾞ	SET SCREW		200424			
ﾊﾞﾈﾘﾝｸﾞ	SPRING	Y	305461			
ﾃｰﾊﾞﾅｯﾄ	NUT, ADJ	Y	200415			
ｶﾞｲﾄｳ	OUTER SLEEVE	Y	200116	200119		
ｽﾋﾟﾝﾄﾞﾙ	SPINDLE	Y	200128			
ｼﾝﾌﾞﾙ	THIMBLE	Y	04AAB204			
ｼﾝﾌﾞﾙｽﾘｰﾌﾞ	SLEEVE, THIMBLE	Y	04AAB205			
ｵｻｴｲﾀ	WASHER		04AAB206			
ﾗﾁｪｯﾄｸﾐﾀﾃ	RATCHET ASSY		04AZB004			
ｽﾋﾟｰﾀﾞｽﾘｰﾌﾞ	SLEEVE, SPEEDER		04AAB208			
ｽﾊﾟﾅ	SPANNER		301336			
【包装資材】	【PACKING】					
ｶｸﾉｳﾊﾞｺ	HOUSING CASE		475001			
ｹｼｮｳｹｰｽ	PAPER CASE		471077			